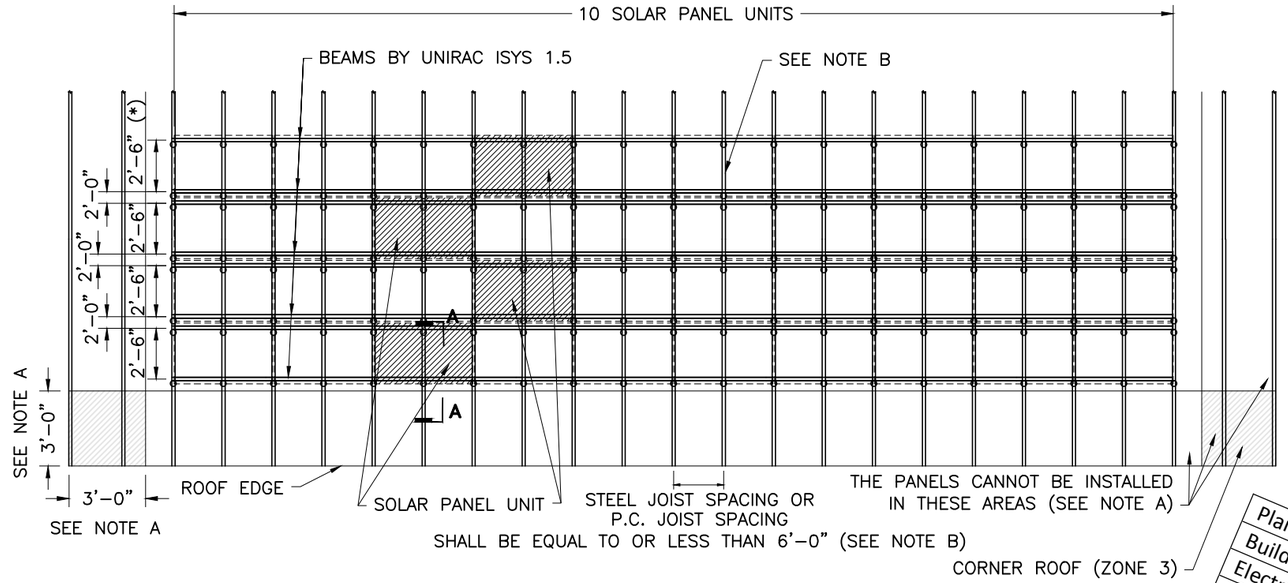

10 KW PLAN VIEW

NTS

LAYOUT FOR SOLAR PANELS ON ROOF ZONE 1 PER FBC 2010
(LOCATION SHALL NOT BE WITHIN ZONES 2 & 3 AS SHOWN)

ARRANGEMENT BASED ON A 39" x 65" SOLAR PANEL DIMENSIONS
* CONFIRM FOR SITE CONDITIONS

N

Plan Review	App. By	Date
Building	J GOMEZ	03/13/ 2013
Electric	NA	03/13/ 2013

Note: This plan is invalid unless accompanied by a Go SOLAR permit card and Go SOLAR permit document. Plans must be on job before any inspection will be made.

FSEC APPROVED PANELS (250 WATTS)
TO COMPLY WITH U.L.1703

1. 1SOLTECH MODEL SPM-240G
2. ASEC MODEL 250G6M6B
3. LIGHTWAY SOLAR MODEL LW250(29)
4. GREEN TRIPLEX MODEL PM250M00
5. MONOX MODEL LG250S1C

NOTE: LIST IS NOT INTENDED TO SHOW ALL CERTIFIED; EQUAL ALTERNATIVES MAY BE USED. SOLAR PANELS USERS ARE ENCOURAGED TO REVIEW MANUFACTURERS AND INSTALLERS DATA FROM FSEC LISTS.

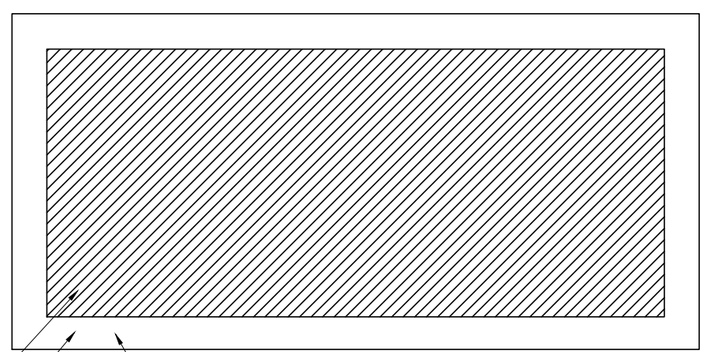

FLAT ROOF PLAN

NTS

LEGEND:

CAN BE INSTALLED

CANNOT BE INSTALLED

NOTE:
A. 10% OF LEAST HORIZONTAL DIMENSION OR 0.4h, WHICHEVER IS SMALLER, BUT NOT LESS THAN EITHER 4% OF LEAST HORIZONTAL DIMENSION OR 3'.
B. THE SYSTEM IS ONLY TO BE USED ON ROOF STRUCTURES OF STEEL JOISTS OR P.C. JOISTS. COORDINATE SHEET A-2 CONSIDERATIONS.
C. THE PANELS MUST BE INSTALLED IN THE ROOF AREA FACING SOUTH.

Digitally signed by Juan Lapica
DN: c=US, st=Florida, l=Coral Gables, o=TYlin International, ou=Structural Deparmtent, cn=Juan Lapica, email=Juan.Lapica@tylin.com
Date: 2013.03.13 15:08:27 -04'00'

JUAN E. LAPICA, P.E.
LICENSE NO.34290
STRUCTURAL ENGINEER

TYLIN INTERNATIONAL
201 ALHAMBRA CIRCLE • SUITE 900
CORAL GABLES, FLORIDA
PHONE: (305) 567-1888 • FAX: (305) 567-1771
E.B.# 00002017
www.tylin.com

CARTAYA & ASSOCIATES ARCHITECTS P.A.
3077 E. COMMERCIAL BLVD. SUITE 201
FT. LAUDERDALE, FLORIDA 33308
771-2724 FAX 776-4280

AA C001888

PHOTOVOLTAIC SYSTEM PROTOTYPE DESIGN
GO SOLAR - BROWARD COUNTY
ENVIRONMENTAL PLANNING AND GROWTH MANAG. DEPT.

10KW PLAN VIEW

DATE 08-12-2013
DRAWN BY YR
CHECKED BY JJ

JOB NO. 1236

SHEET A-1
1 OF 7

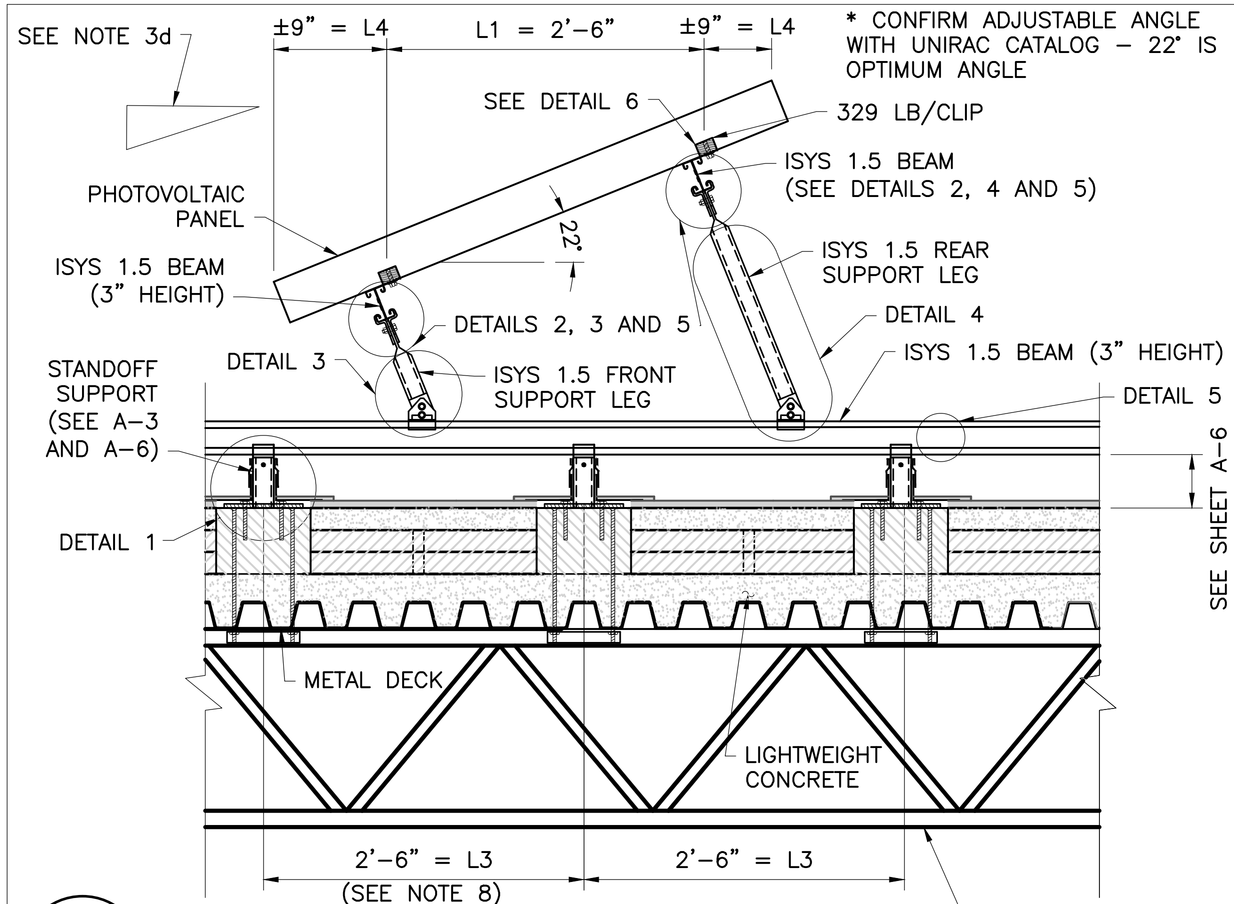

A / A-2 SECTION (FOR STEEL JOIST)

SCALE: 1-1/2" = 1'-0"

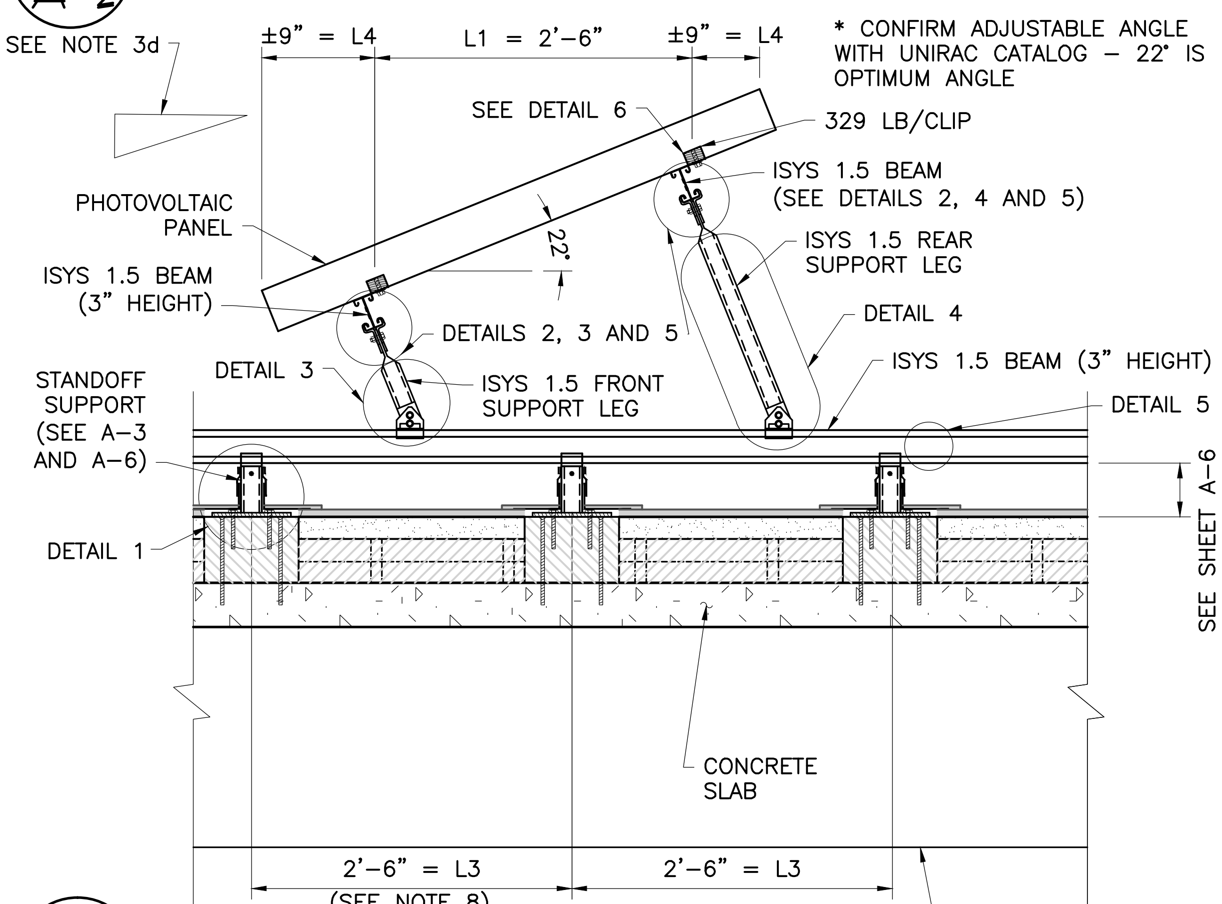

A / A-2 SECTION (FOR P.C. JOIST)

SCALE: 1-1/2" = 1'-0"

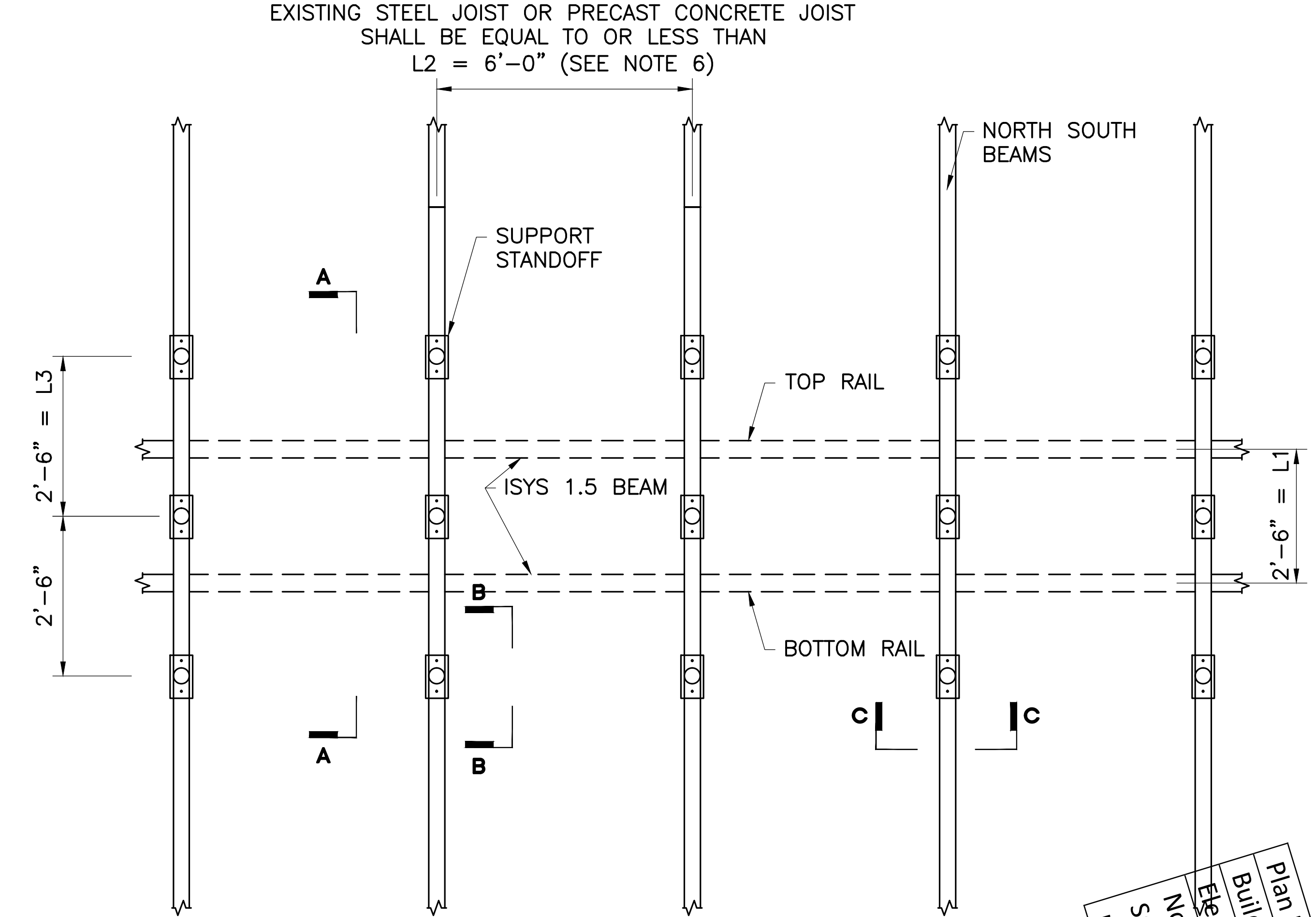

N

LOWER PARTIAL PLAN VIEW
SOLAR PANEL ATTACHMENT

GENERAL NOTES:

1. DESIGN LOAD CRITERIA

a. FLORIDA BUILDING CODE 2010
b. ASCE 7–10, HURRICANE PRONE REGION
c. BASIC SPEED – 170 mph
d. EXPOSURE CATEGORY : C
e. RISK CATEGORY : II
f. DESIGN LOADS:

WIND LOADS
+56 PSF POSITIVE PRESSURE
–68 PSF UPLIFT

DEAD LOAD PANEL ASSUMED
5 PSF

THE WEIGHT OF SOLAR PANELS AND SUPPORT STRUCTURE TOGETHER IS 5 LB/FT². WE ASSUMED THAT THE LIVE LOAD ROOF IS 30 LB/FT² WHICH IS MORE THAN THE DEAD LOAD OF 5 LB/FT², WHICH IS A CONSERVATIVE CONDITION.

2. ALL STRUCTURAL SUPPORT SYSTEMS MANUFACTURED BY UNIRAC ISYS 1.5 IN COMPLIANCE WITH AAMA 911–92.

3. LIMITATIONS; THESE NOTES SET OUT THE PARAMETERS UNDER WHICH THE SOLAR PANELS MUST BE INSTALLED.

a. BROWARD COUNTY
b. ROOF COMMERCIAL SYSTEM
c. 30' MAXIMUM HEIGHTS IN BUILDING ROOF
d. ROOF MUST BE FLAT (SLOPE < 7°) AND THE SOLAR PANEL SHALL BE SLOPED TOWARDS THE SOUTH AT 22°.
e. SOLAR PANEL MUST WITHSTAND THE FOLLOWING WIND LOADS:
  – DOWNWARD DIRECTION: +56 PSF
  – UPWARD DIRECTION: –68 PSF

4. CONTRACTOR IS RESPONSIBLE TO VERIFY THAT EXISTING ROOF AND STRUCTURAL CONDITIONS MATCH THE STRUCTURE SHOWN IN THESE DRAWINGS PRIOR TO INSTALLATION.

5. CONTRACTOR SHALL VERIFY THAT THE EXISTING ROOF STRUCTURAL SYSTEM IS IN GOOD CONDITION.

6. MAXIMUM SPACING BETWEEN STEEL AND CONCRETE JOIST IS 6'–0".

7. THE UNIRAC ISYS 1.5 INTERFACE SHALL BE DIRECTLY ABOVE A STEEL OR CONCRETE JOIST.

8. CONFIRM WITH MANUFACTURER OF SELECTED PANEL FROM LIST SHOWN ON A–1.

9. FOLLOW ALL UNIRAC MANUALS THAT APPLY.

Plan Review	App. By	Date
Building	J GOMEZ	03/13/ 2013
Electric	NA	03/13/ 2013

Note: This plan is invalid unless accompanied by a Go SOLAR permit card and Go SOLAR permit document. Plans must be on job before any inspection will be made.

JUAN E. LAPICA, P.E.
LICENSE NO.34290
STRUCTURAL ENGINEER

TYLININTERNATIONAL
201 ALHAMBRA CIRCLE • SUITE 900
CORAL GABLES, FLORIDA
PHONE: (305) 567-1888 • FAX: (305) 567-1771
E.B.# 00002017
www.tylin.com

CARTAYA & ASSOCIATES ARCHITECTS P.A.
3077 E. COMMERCIAL BLVD. SUITE 201
FT. LAUDERDALE, FLORIDA 33308
771-2724 FAX 776-4280

SEAL: AA C001686

PROJECT: PHOTOVOLTAIC SYSTEM PROTOTYPE DESIGN
GO SOLAR - BROWARD COUNTY
ENVIRONMENTAL PLANNING AND GROWTH MANAG. DEPT.

ALL DESIGNS AND DETAILS INDICATED OR REPRESENTED BY THIS DRAWING ARE FOR USE ON AND IN CONJUCTION WITH THE SPECIFIED PROJECT. THIS IS THE PROPERTY OF CARTAYA AND ASSOCIATES ARCHITECTS, P.A. AND SHALL NOT BE USED OR REPRODUCED IN WHOLE OR IN PART WITHOUT WRITTEN PERMISSION FROM A PRINCIPAL OF THE THE FIRM OR BE LIABLE FOR THE FULLEST LEGAL RECOURSE. THE CONTRACTOR SHALL VERIFY ALL EXISTING CONDITIONS AND DIMENSIONS AND NOTIFY THIS OFFICE OF ANY DISCREPANCIES PRIOR TO THE EXECUTION OF THE WORK. WRITTEN DIMENSIONS TAKE PRECEDENCE OVER SCALED DIMENSIONS.

REVISIONS:

TITLE: 10KW SECTIONS

DATE: 08-12-2013
DRAWN BY: YR
CHECKED BY: JJ

JOB NO: 1236

SHEET: A-2

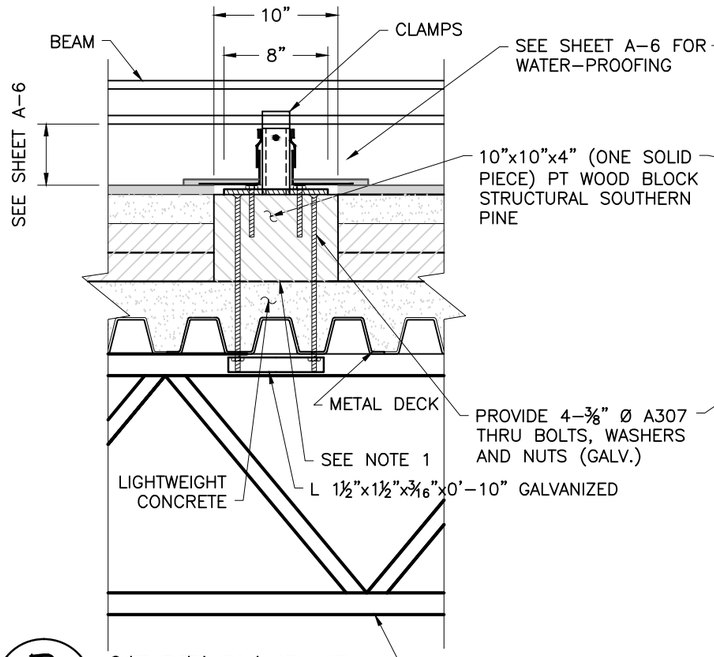

B / A-2 SECTION B-B DETAIL D

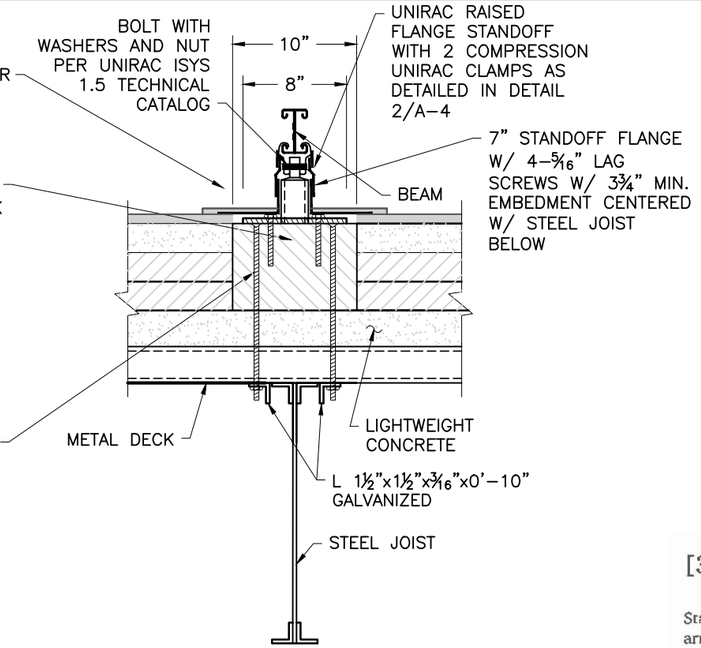

C / A-2 SECTION DETAIL D

[3.2.3] Laying out standoffs

Standoffs (Figure 10) are used to increase the height of the array above the surface of the roof. Pair each standoff with a flashing to seal the lag bolt penetrations to the roof.

7" *Raised flange standoff*

DETAIL 1

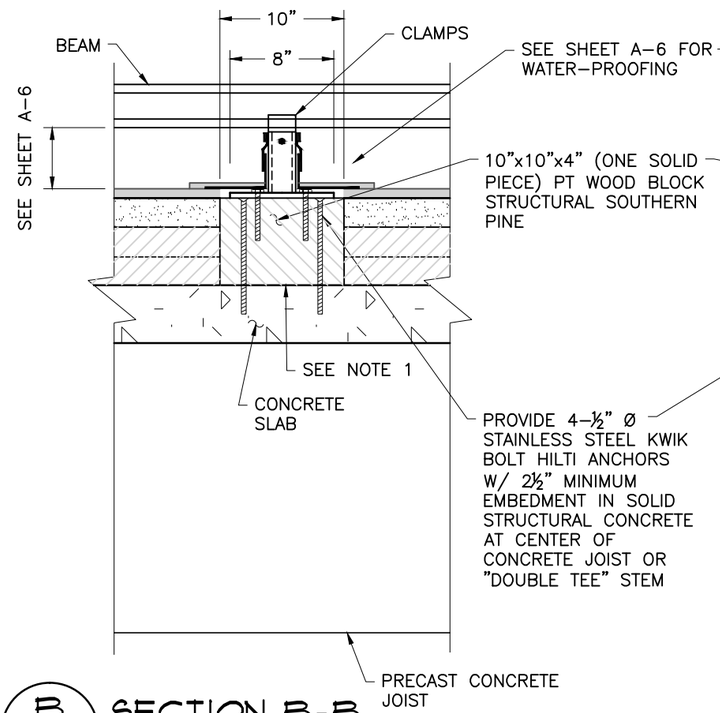

B / A-2 SECTION B-B DETAIL D

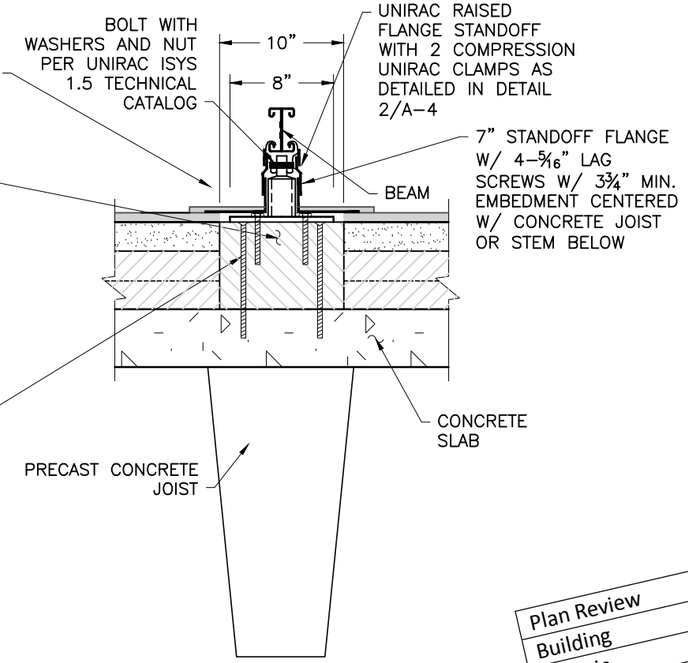

C / A-2 SECTION DETAIL D

NOTE:

EXISTING CONDITIONS APPLICABLE TO THESE DRAWINGS SHALL BE VERIFIED PRIOR TO INSTALLATION.

Plan Review	App. By	Date
Building	J GOMEZ	03/13/ 2013
Electric	NA	03/13/ 2013

Note: This plan is invalid unless accompanied by a Go SOLAR permit card and Go SOLAR permit document. Plans must be on job before any inspection will be made.

JUAN E. LAPICA, P.E.
LICENSE NO.34290
STRUCTURAL ENGINEER

T·Y·LIN INTERNATIONAL
201 ALHAMBRA CIRCLE • SUITE 900
CORAL GABLES, FLORIDA
PHONE: (305) 567-1888 • FAX: (305) 567-1771
E.B.# 00002017
www.tylin.com

CARTAYA & ASSOCIATES ARCHITECTS P.A.
3077 E. COMMERCIAL BLVD. SUITE 201
FT. LAUDERDALE, FLORIDA 33308
771-2724 FAX 776-4280

AA C001898

PROJECT: PHOTOVOLTAIC SYSTEM PROTOTYPE DESIGN
GO SOLAR - BROWARD COUNTY
ENVIRONMENTAL PLANNING AND GROWTH MANAG. DEPT.

ALL DESIGNS AND DETAILS INDICATED OR REPRESENTED BY THIS DRAWING ARE FOR USE ONLY AND IN CONNECTION WITH THE SPECIFIED PROJECT. THIS IS THE PROPERTY OF CARTAYA AND ASSOCIATES ARCHITECTS, AND SHALL BE RETURNED OR REPRODUCED IN WHOLE OR IN PART WITHOUT WRITTEN PERMISSION FROM A PRINCIPAL OF THE FIRM. THE USE OF ANY DESIGN OR DETAILS FOR THE PROJECT SHALL RECOGNIZE THE CONTRACTOR SHALL VERIFY ALL DIMENSIONS AND DIMENSIONS AND NOTIFY THE OFFICE OF ANY DISCREPANCIES PRIOR TO THE EXECUTION OF THE WORK. WRITTEN DIMENSIONS TAKE PRECEDENCE OVER SCALED DIMENSIONS.

TITLE: 10KW SECTIONS AND DETAILS

DATE: 03-12-2013
DRAWN BY: YR
CHECKED BY: JJ

JOB NO: 1236

SHEET: A-3

ISYS Compression Clamp
Drawing No. A62008

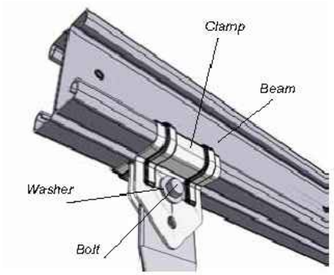

- **Clamp Material:** ASTM A653 Grade 50 Galvanized (Min. G90)
  Min. Tensile Strength: 60 ksi; Min. Yield Strength: 50 ksi
- **Compression Clamp Weight:** 0.18 lbs (81 g)
- Allowable and design loads are valid when components are assembled according to authorized UNIRAC documents.
- Clamps are compatible with ISYS Small Series I-Beams
- Use two clamps per beam connection
- For east/west beams: assemble each set of two clamps with one ¼-20 x ¾ SAE Grade 8 hex head bolt, one ¼ ANSI, B, N flat washer, and one ¼-20 SAE Grade 8 serrated flange nut. The bolt must be assembled in the top most hole of the clamp
- For north/south beams: assemble each set of two clamps with two bolts, two washers, and two nuts
- Tighten to 10 ft-lbs of torque
- Resistance factors are determined according to **FBC 2222.2 standards**
- Safety factors are determined according to AISI S100 section F1.2

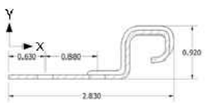

Dimensions specified in inches unless noted

Applied Load Direction	Average Ultimate lbs (N)	Allowable Load (ASD) lbs (N)	Safety Factor, Ω	Design Load (LRFD US) lbs (N)	Resistance Factor, Φ
Tension, X+	2013 (8954)	803 (3572)	2.51	1167 (5191)	0.579
Compression, X-	3173 (14114)	1132 (5035)	2.80	1379 (6134)	0.430
Transverse, Y±	59 (262)	23 (102)	2.55	35 (156)	0.584
Sliding, Z±	200 (890)	81 (360)	2.44	120 (534)	0.600
Moment, M_x	97 ft-lbs (132 Nm)	49 ft-lbs (66 Nm)	2.00	78 ft-lbs (106 Nm)	0.800
Conversion factor LRFD US to LSD Canada = 0.75					

DETAIL 2

ISYS Front Support Leg
Drawing No. A62000, A620001

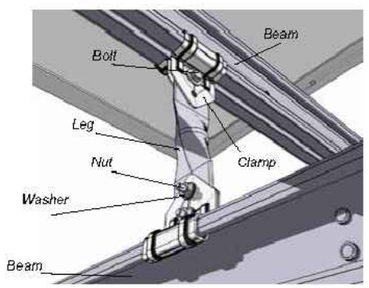

- **Front Support Leg Material:** 1" Galvanized electrical metallic tubing
  Ultimate tensile: 75 ksi; Yield: 30 ksi
- **Front Support Leg Weight:** 0.38 lbs (172 g)
- Allowable and design loads are valid when components are assembled according to authorized UNIRAC documents
- Front support legs are compatible with Compression Clamps
- Resistance factors are determined according to AISI S100 section F1.1
- Safety factors are determined according to AISI S100 section F1.2

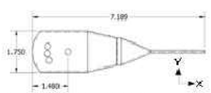

Dimensions specified in inches unless noted

Applied Load Direction	Average Ultimate lbs (N)	Allowable Load (ASD) lbs (N)	Safety Factor, Ω	Design Load (LRFD US) lbs (N)	Resistance Factor, Φ
Tension, X+	2013 (8954)	803 (3572)	2.51	1282 (5703)	0.637
Compression, X-	2646 (11770)	1016 (4519)	2.60	1628 (7242)	0.615
Conversion factor LRFD US to LSD Canada = 0.75					

DETAIL 3

ISYS Rear Support Leg
Drawing No. A62002, A62003, A62004, A62005, A62006, A62007

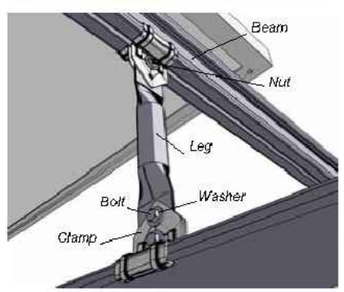

- **Rear Support Leg Material:** 1" Galvanized electrical metallic tubing
  Ultimate tensile: 75 ksi; Yield: 30 ksi
- **Rear Support Leg Weight:** varies from 0.51 to 1.36 lb (231 to 617 g)
- Allowable and design loads are valid when components are assembled according to authorized UNIRAC documents
- Rear support legs are compatible with Compression Clamps
- Resistance factors are determined according to AISI S100 section F1.1
- Safety factors are determined according to AISI S100 section F1.2
- Compression loads apply to the leg only; check clamp capacities

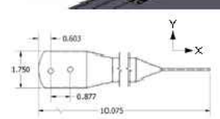

Applied Load Direction	Average Ultimate lbs (N)	Allowable Load (ASD) lbs (N)	Safety Factor, Ω	Design Load (LRFD US) lbs (N)	Resistance Factor, Φ
Tension, X+	2013 (8954)	803 (3572)	2.51	1282 (5703)	0.637
Compression, X-	2746 (12215)	1289 (5734)	2.13	1976 (8790)	0.720

DETAIL 4

ISYS Small Series I-Beam

MATERIAL: 16 GA STEEL, ASTM A653 Grade 50; Min. Tensile Strength: 60 ksi; Min. Yield Strength: 50 ksi				
Properties	Units	Beam Height (in)		
		3.0	4.20	5.25
Approximate Weight (kips per linear ft)	k/ft	0.002403	0.002860	0.003260
Total Cross Sectional Area	in^2	0.707	0.840	0.959
Effective Area	in^2	0.635	0.654	0.663
Section Modulus (X-Axis)	in^3	0.569	0.941	1.316
Section Modulus (Y-Axis)	in^3	0.180	0.179	0.179
Moment of Inertia (X-Axis)	in^4	0.854	1.976	3.455
Moment of Inertia (Y-Axis)	in^4	0.155	0.154	0.154
Radius of Gyration (X-Axis)	in	1.099	1.534	1.898
Radius of Gyration (Y-Axis)	in	0.467	0.428	0.400
Single Member Weak Axis Centroid	in	0.333	0.283	0.252
Single Member Moment of Inertia (Y-Axis)	in^4	0.038	0.043	0.046
For Reference Only:				
Nominal Moment Capacity (X Axis)	*kip*ft*	*2.37*	*3.92*	*5.40*
Nominal Moment Capacity (Y Axis)	*kip*ft*	*0.75*	*0.75*	*0.75*
Nominal Tension Capacity	*kips*	*35.34*	*41.99*	*47.93*
Nominal Compression Capacity	*kips*	*31.77*	*32.68*	*47.94*
Nominal Shear Capacity (along X Axis)	*kips*	*3.87*	*3.68*	*3.68*
Nominal Shear Capacity (along Y Axis)	*kips*	*11.05*	*12.30*	*11.65*

DETAIL 5

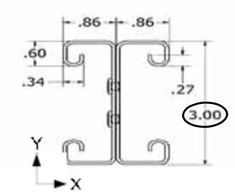

	App. By	Date
Plan Review	J GOMEZ	03/13/ 2013
Building		03/13/ 2013
Electric	NA	

Note: This plan is invalid unless accompanied by a Go SOLAR permit card and Go SOLAR permit document. Plans must be on job before any inspection will be made.

JUAN E. LAPICA, P.E.
LICENSE NO.34290
STRUCTURAL ENGINEER

T·Y·LIN INTERNATIONAL
201 ALHAMBRA CIRCLE • SUITE 900
CORAL GABLES, FLORIDA
PHONE: (305) 567-1888 • FAX: (305) 567-1771
E.B.# 00002017
www.tylin.com

CARTAYA & ASSOCIATES
ARCHITECTS P.A.
3077 E. COMMERCIAL BLVD. SUITE 201
FT. LAUDERDALE, FLORIDA 33308
771-2724 FAX 776-4280
AA. C000880

PROJECT: PHOTOVOLTAIC SYSTEM PROTOTYPE DESIGN
GO SOLAR - BROWARD COUNTY
ENVIRONMENTAL PLANNING AND GROWTH MANAG. DEPT.

ALL DESIGNS AND MATERIAL PRODUCED BY CARTAYA & ASSOCIATES IN CONNECTION WITH THE REPORTED PROJECT, THIS IS THE PROPERTY OF THE FIRM, AND MAY BE REPRODUCED OR USED IN ANY WAY, WITHOUT WRITTEN PERMISSION FROM THE PROPERTY OF THE FIRM, OR ANY PURCHASERS PRIOR TO THE ISSUANCE OF THE FINAL WRITTEN DRAWINGS FULLY PURCHASED FROM CARTAYA & ASSOCIATES.

TITLE: 10KW DETAILS

DATE: 03-13-2013
DRAWN BY: YB
CHECKED BY: JJ

JOB NO.: 1236

A-4
4 OF 7

ISYS Module Clip Without Dimples
Drawing No. A62142

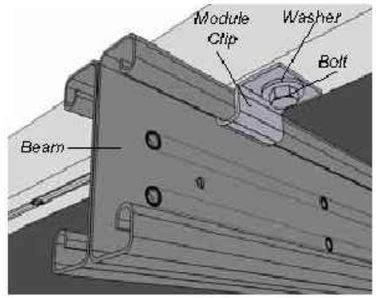

- **Module Clip Material:** ASTM A653 Grade 50 Galvanized (Min. G90) Min. Tensile Strength: 60 ksi; Min. Yield Strength: 50 ksi
- **Module Clip weight:** 0.06 lbs (26g)
- Allowable and design loads are valid when components are assembled according to authorized Unirac documents.
- Clips are compatible with ISYS small series I-beams.
- Assemble with ¼-20 x ¾" SAE Grade 8 hex head bolt, ¼" ANSI B, N flat washer, and ¼-20 SAE Grade 8 serrated flange nut.
- Tighten to 10 ft-lbs of torque.
- Resistance factors are determined according to AISI S100 section F1.1.
- Safety factors are determined according to AISI S100 section

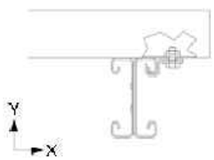

Dimensions specified in inches unless noted

Applied Load Direction	Average Ultimate lbs (N)	Allowable Load (ASD) lbs (N)	Safety Factor, Ω	Design Load (LRFD US) lbs (N)	Resistance Factor, Φ
Tension, Y+	717 (3189)	329 (1463)	2.18	505 (2246)	0.70
Transverse, X±	1263 (5618)	481 (2140)	2.62	738 (3283)	0.58
Sliding, Z±	121 (538)	34 (151)	3.58	52 (231)	0.43
Conversion factor LRFD US to LSD Canada = 0.75					

DETAIL 6

	App. By	Date
Plan Review	J GOMEZ	03/13/ 2013
Building	NA	03/13/ 2013
Electric		

Note: This plan is invalid unless accompanied by a Go SOLAR permit card and Go SOLAR permit document. Plans must be on job before any inspection will be made.

JUAN E. LAPICA, P.E.
LICENSE NO.34290
STRUCTURAL ENGINEER

T-Y-LIN INTERNATIONAL
201 ALHAMBRA CIRCLE • SUITE 900
CORAL GABLES, FLORIDA
PHONE: (305) 567-1888 • FAX: (305) 567-1771
E.B.# 00002017
www.tylin.com

CARTAYA & ASSOCIATES ARCHITECTS P.A.
3077 E. COMMERCIAL BLVD. SUITE 201
FT. LAUDERDALE, FLORIDA 33308
771-2724 FAX 776-4280
AA. C000980

PROJECT: PHOTOVOLTAIC SYSTEM PROTOTYPE DESIGN
GO SOLAR - BROWARD COUNTY
ENVIRONMENTAL PLANNING AND GROWTH MANAG. DEPT.

ALL DRAWINGS AND DETAILS PRODUCED OR REPRESENTED BY THIS DRAWING ARE, ONE AND ALL, THE PROPERTY OF CARTAYA & ASSOCIATES, ARCHITECTS, P.A. AND ARE NOT TO BE DUPLICATED OR USED FOR ANY OTHER PROJECT, THIS IS THE PROPERTY OF CARTAYA & ASSOCIATES, ARCHITECTS, P.A. AND ARE NOT TO BE DUPLICATED OR USED FOR ANY OTHER PROJECT WITHOUT WRITTEN PERMISSION FROM THE OWNER OF THE SAME. WRITTEN DIMENSIONS TAKE PRECEDENCE OVER SCALED DIMENSIONS.

TITLE: 10KW DETAILS

DATE: 08-12-2013
DRAWN BY: YB
CHECKED BY: JJ

JOB NO. 1236

A-5

Plan Review	App. By	Date
Building	J GOMEZ	03/13/ 2013
Electric	NA	03/13/ 2013

Note: This plan is invalid unless accompanied by a Go SOLAR permit card and Go SOLAR permit document. Plans must be on job before any inspection will be made.

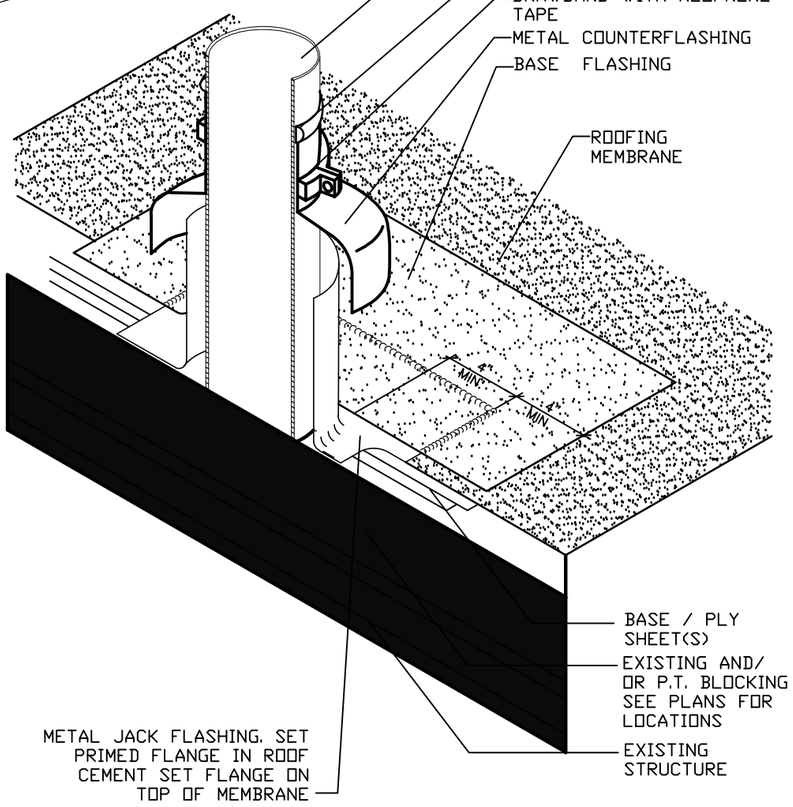

ROOFING PENETRATION FLASHING DETAIL

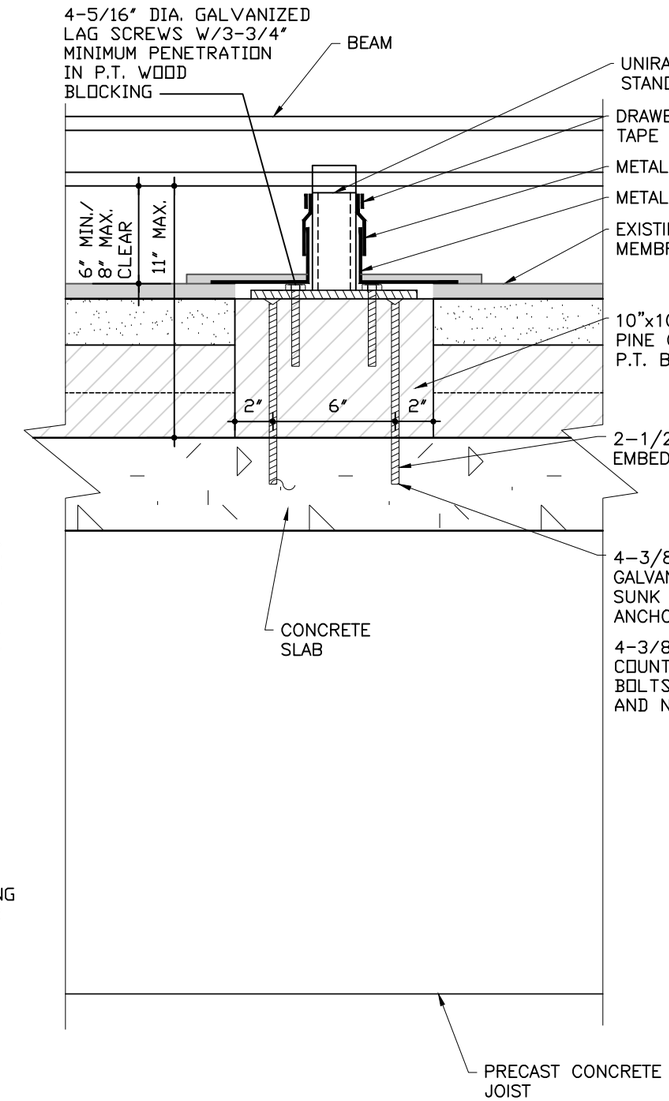

CONCRETE SLAB OVER PRECAST CONCRETE JOIST WATERPROOFING DETAIL

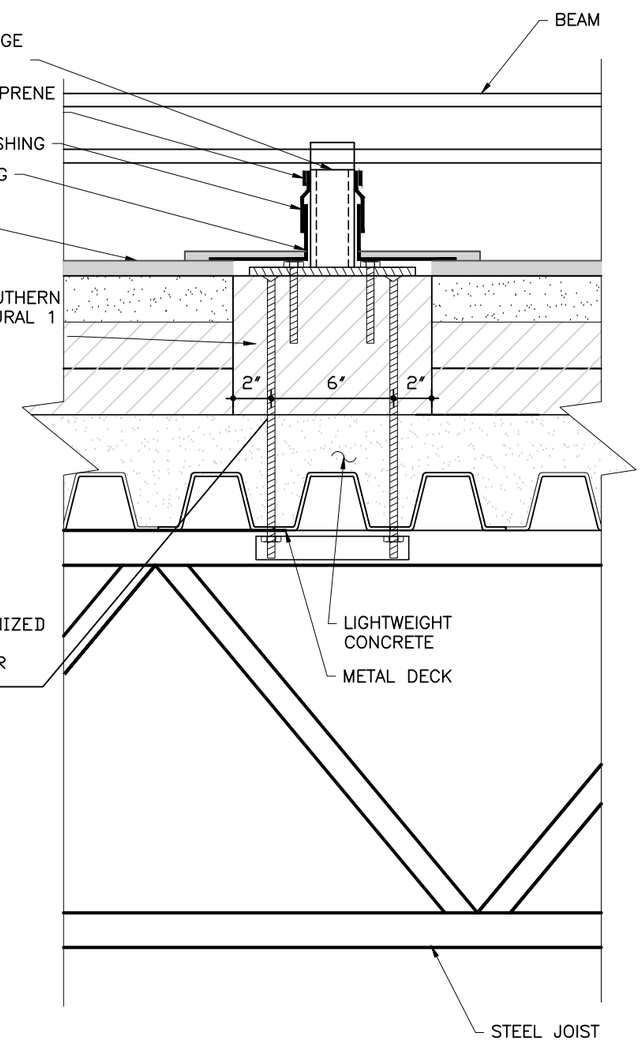

METAL DECK OVER STEEL JOIST WATERPROOFING DETAIL

NOTES:
1. PROVIDE NEOPRENE WASHERS AT ALL ROOFING PENETRATION (TYP.)
2. NEW ROOFING MEMBRANE TO MATCH EXISTING MEMBRANE
3. INFILL WITH FOAM OR RIGID INSULATION ABOVE STRUCTURAL P.T. BLOCKING WHERE REQUIRED.
4. P.T. BLOCKING SHALL BE FIRE RETARDANT WOOD AT TYPE I AND TYPE II CONSTRUCTION.
5. CUT ROOFING AND INSULATION AS REQUIRED TO INSTALL P.T. BLOCKING DIRECTLY ABOVE STRUCTURAL CONCRETE.

JUAN E. LAPICA, P.E.
LICENSE NO.34290
STRUCTURAL ENGINEER

TY·LIN INTERNATIONAL
201 ALHAMBRA CIRCLE • SUITE 900
CORAL GABLES, FLORIDA
PHONE: (305) 567-1888 • FAX: (305) 567-1771
E.B.# 00002017
www.tylin.com

CARTAYA & ASSOCIATES ARCHITECTS P.A.
3077 E. COMMERCIAL BLVD. SUITE 201
FT. LAUDERDALE, FLORIDA 33308
771-2724 FAX 776-4280
AA. 0000889

PROJECT: PHOTOVOLTAIC SYSTEM PROTOTYPE DESIGN
GO SOLAR - BROWARD COUNTY
ENVIRONMENTAL PLANNING AND GROWTH MANAG. DEPT.

ALL DRAWINGS AND DETAILS INDICATED OR SHOWN ON THESE DRAWINGS ARE, AND SHALL REMAIN THE PROPERTY OF CARTAYA & ASSOCIATES, P.A. AND WILL NOT BE REPRODUCED OR USED IN CONNECTION WITH THE PROJECT INDICATED HEREIN WITHOUT PRIOR WRITTEN CONSENT OF CARTAYA & ASSOCIATES, P.A. ANY REPRODUCTION OR USE OF THESE DRAWINGS OR DETAILS WITHOUT WRITTEN CONSENT IS PROHIBITED AND ANY INFORMATION OBTAINED FROM THESE DRAWINGS MUST BE VERIFIED BY THE ARCHITECT OF RECORD. THE ARCHITECT OF RECORD IS NOT RESPONSIBLE FOR ANY INFORMATION OBTAINED FROM THESE DRAWINGS UNLESS VERIFIED BY THE ARCHITECT OF RECORD. THE ARCHITECT OF RECORD IS NOT RESPONSIBLE FOR ANY INFORMATION OBTAINED FROM THESE DRAWINGS UNLESS VERIFIED BY THE ARCHITECT OF RECORD. THE ARCHITECT OF RECORD IS NOT RESPONSIBLE FOR ANY INFORMATION OBTAINED FROM THESE DRAWINGS UNLESS VERIFIED BY THE ARCHITECT OF RECORD.

TITLE: 10KW WATERPROOFING DETAIL

REVISIONS

DATE: 06-13-2013
DRAWN BY: YZ
CHECKED BY: JJ

JOB NO. 1236

SHEET A-6
6 OF 7

WIND LOAD PRESSURE

Using Rooftop Structures and Equipments (29.5.1 Sheet 308) Broward County
Residential: II risk category. (Table 1.5.1/ Sheet 2)

V= 170 Mph

K_d= 0.85 (Table 26.6-1/ Sheet 250)
K_{zt}= 1.0

Z = 15' → K_z = 0.85 (Table 29.3-1/ Sheet 310)
Z= 20' → K_z = 0.90
Z= 25' → K_z = 0.94
Z= 30' → K_z = 0.98

Q= 0.00256 K_z x K_{zt} x K_d x V^2

$q_{15'}$ = 53.4 lb/ft^2
$q_{20'}$ = 56.6 lb/ft^2
$q_{25'}$ = 59.1 lb/ft^2
$q_{30'}$ = 61.6 lb/ft^2

Note:
1- We use zone 1 for the calculation of wind load, assuming that the panels may be installed in zone 1
2- We consider that the panels are not part of the roof and GC_{pi} = ± 0

Θ≤7° h = 30'
p_1 = 61.6[-1.1-(+0] = -68 lb/ft^2 **(Upward Pressure)**
27°<Θ≤45° (Monoslope roof) Fig 30.4-5A/ Sheet 341
GC_{p123} = +0.3
GC_{p1} = –1.1 **(This coefficient value is the most critical for the upward load)**

CONCRETE SLAB OVER PCJ OR METAL DECK OVER STEEL JOIST

PROCEDURE FOR SELECTING LOAD OVER SYSTEM ELEMENTS UNIRAC ISYS 1.5
Data:
DL = 5 PSF (weight of system) (assumed)
WL = +56 PSF (downward pressure / DP)
WL = –68 PSF (upward pressure / UP)
Load Combination
1) DL + WL (DP) = 5 + 56 x cos 22° = +57 PSF
2) DL + 0.75WL (DP) = 5 + 0.75 x 56 x cos 22° = –44 PSF
3) 0.6DL + WL (UP) = 0.6 x 5 – 68 x cos 22° = –60 PSF

Dimensions assumed / data:
L_1 = 2'-6": spacing between leg support
L_2 = 6'-0": spacing between steel joist or PC joist
L_3 = 2'-6": spacing between roof support
L_4 = 0.75': cantilever on both sides of the panel

Solar panel beam
Use load combination (1)
q = 57 PSF (L_1/2 + L_4) = 57 (2.5'/2 + 0.75') = 114 lb/ft = 0.114^k/ft
M = ⅛ $qL_2{}^2$ = 1/8 x 0.114 x 6^2 = 0.52 k-ft < 2.37 k-ft
Use: beam height = 3"

Beam support for the legs
P = 57 PSF (L_1/2 + L_4) (L_2) = 57 (2.5'/2 + 0.75') (6') = 684 lb = 0.68^k
Assume the inclined leg in the center of the beam
M = ¼ x P x L_3 = ¼ x 0.68 x 6' = 1.03 k-ft < 2.37 k-ft
Use: beam height = 3"

Front support leg / rear support leg
Tension: use load combination (3)
T = 60 PSF (L_1/2 + L_4) (L_2) = 60 (2.5'/2 + 0.75') (6') = 720 lb < 803 lb OK
Compression: use load combination (1)
C = 57 PSF (L_1/2 + L_4) (L_2) = 57 (2.5'/2 + 0.75') (6') = 684 lb < 1016 lb OK

Beam connection hardware
From support leg:
T = 720 lb < 803 lb OK
C = 684 lb < 1132 lb OK

Module clip capacity = 329 lb
Panel area = 39" x 65"/144 = 17.6 SF
T = 60 x 17.6/4 = 264 lb/connection
264 lb < 329 lb OK

Expansion bolts connection
2.5' = horizontal distance between the center of the support
2.15' = vertical distance between the center of the support
8" = distance between anchor bolts

F_y = -60 PSF x cos 22° (L_1 + 2 L_4) (L_2)
F_y = -60 x 0.927 (2.5' + 2' x 0.75') (6')
F_y = 1335 lb ↑ / 4 adjustable roof interface
F_y = 333 lb ↑ / ARI
F_x = -60 PSF x sin 22° (1.62') (L_2)
F_x = -60 x 0.375 x 1.62' (6')
F_x = 218 lb / 4 adjustable roof interface
F_x = 55 lb / ARI

Moment (M) at base of connection
M = F_y (L_3) + F_x (2.15')
M = 333 lb x 5' x 12" + 55 lb x 2.15' x 12"
M = 21399 lb-in

M = 2 bolts (8") x f_1
f_1 = M / (2 x 8") = 21399 / (2 x 8") = 1337 lb / bolt
f_2 = F_y/ 4 bolts = 333 lb / 4 = 83 lb / bolt

N_d = f_1 + f_2 = 1337 lb / bolt + 83 lb / bolt
N_d = 1416 lb (tension)
V_d = F_x = 55 / 4 bolts = 14 lb / bolt
V_d = 14 lb / bolt (shear)
Use: ½"∅ expansion bolt by Hilti
Allowable load for: f'$_c$ = 3000 lb / n^2
2½" = min. emb.
N = 1726 lb / bolt (f.c. = 3000 PSI)
V = 3194 lb / bolt
$(N_d/N)^{5/3} + (V_d/V)^{5/3}$
$(1416 / 1726)^{5/3} + (14 / 3194)^{5/3}$ = 0.73 < 1.0 OK

Thru bolt connection
ASD / combined tension and shear
N_d = 1416 lb / bolt (tension)
V_d = 14 lb / bolt (shear) (neglecting the shear)
Use: ⅜"∅ thru bolts (A307)

Lag screw check per FBC 1620.6
1) Direct uplift
A = 2.5 x 6 = 15 SF
U = 1.5 x 15 x 61.6 = 1386 lb
1386 / 4 screws = 346.5 lb

2) Horizontal force
H = 3.1 (2+3)/12 x 6 x 61.6 = 479 lb
479 / 8 screws = 60 lb
M = 479 x 8 / 2 supports = 1916 lb-inch
T/C = 1916 / (2.75" x 2) = 348 lb
Total withdrawal = 346 + 348 = 694.4 lb
Shear = 60 lb
R = $\sqrt{60^2 + 694.4^2}$ = 697 lb
α = tω^{-1} 694.4/60 = 85°
z' = 100 lb for 5/16" screws southern pine
z' α = (ω'þ)z' / ((ω'þ) $\cos^2$ α + z' $\sin^2$ α) þ = 3.75"
= (307 x 3.75) 100 / ((307 x 3.75) 0.01 + 100 x 0.99) = 1041 lb
0.7 x 1041 = 729 lb > 697 lb
0.7 → wet use factor

Plan Review	App. By	Date
Building	J GOMEZ	03/13/ 2013
Electric	NA	03/13/ 2013

Note: This plan is invalid unless accompanied by a Go SOLAR permit card and Go SOLAR permit document. Plans must be on job before any inspection will be made.

JUAN E. LAPICA, P.E.
LICENSE NO.34290
STRUCTURAL ENGINEER

T-Y-LIN INTERNATIONAL
201 ALHAMBRA CIRCLE • SUITE 900
CORAL GABLES, FLORIDA
PHONE: (305) 567-1888 • FAX: (305) 567-1771
E.B.# 00002017
www.tylin.com

CARTAYA & ASSOCIATES ARCHITECTS P.A.
3077 E. COMMERCIAL BLVD. SUITE 201
FT. LAUDERDALE, FLORIDA 33308
771-2724 FAX 776-4280
AA C000880

PROJECT: PHOTOVOLTAIC SYSTEM PROTOTYPE DESIGN
GO SOLAR - BROWARD COUNTY
ENVIRONMENTAL PLANNING AND GROWTH MANAG. DEPT.

ALL DRAWINGS AND DETAILS PRODUCED OR REPRESENTED BY THIS DRAWING ARE FOR USE IN CONNECTION WITH THE REFERRED PROJECT. THIS IS THE PROPERTY OF CARTAYA & ASSOCIATES ARCHITECTS P.A. AND MUST BE RETURNED UPON REQUEST. NO PART OF THIS DRAWING MAY BE REPRODUCED OR TRANSMITTED IN ANY FORM OR BY ANY MEANS, ELECTRONIC OR MECHANICAL, INCLUDING PHOTOCOPYING, RECORDING OR BY ANY INFORMATION STORAGE AND RETRIEVAL SYSTEM, WITHOUT THE PRIOR WRITTEN PERMISSION OF THE OWNER. WRITTEN DIMENSIONS TAKE PRECEDENCE OVER SCALED DIMENSIONS.

TITLE: 10KW CALCULATIONS

DATE: 03-13-2013
DRAWN BY: YB
CHECKED BY: JJ

JOB NO. 1236

A-7
7 OF 7