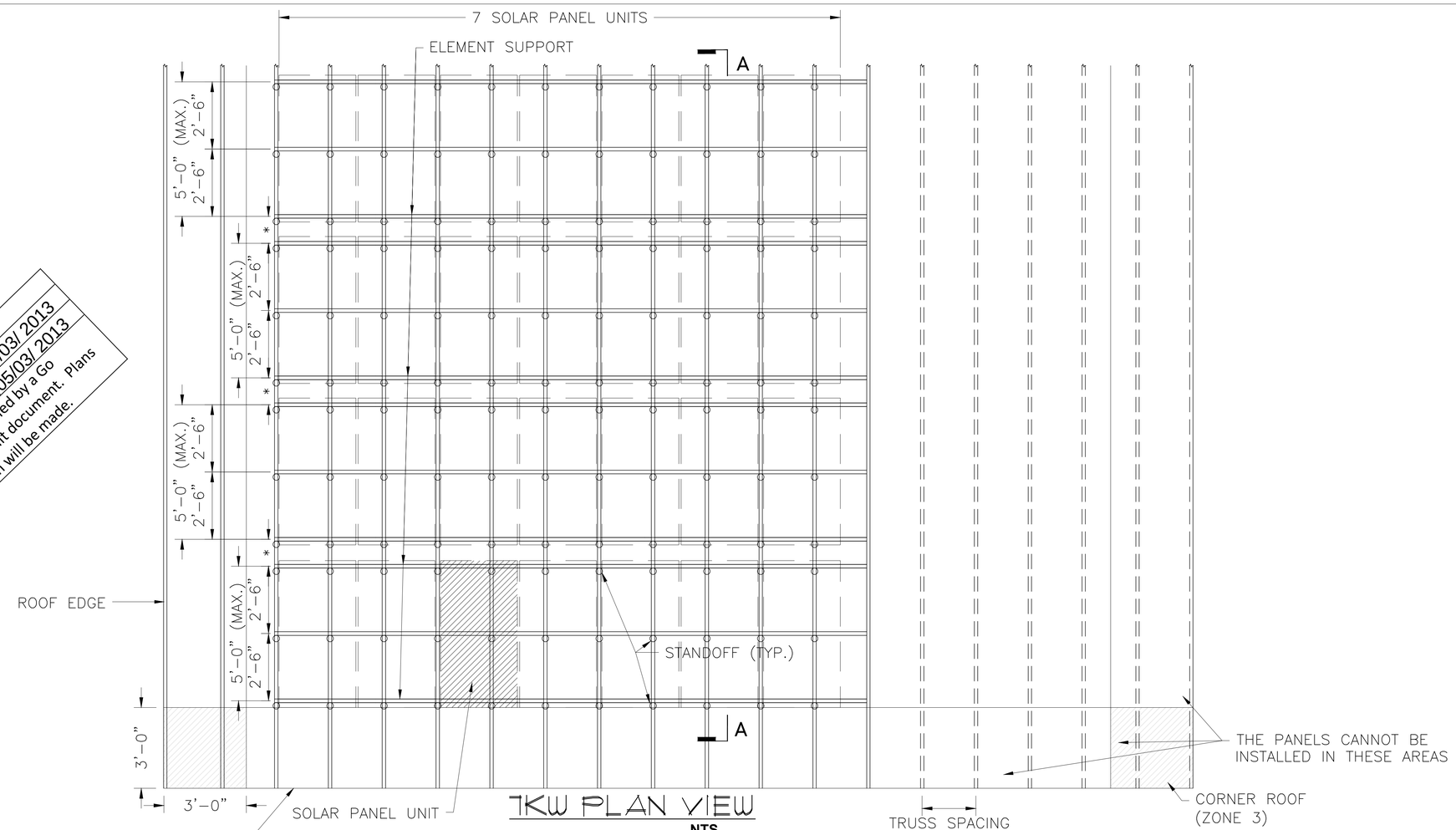

7KW PLAN VIEW

NTS

LAYOUT FOR SOLAR PANELS ON ROOF ZONE 1 PER FBC 2010
(LOCATION SHALL NOT BE WITHIN ZONES 2 & 3 AS SHOWN)

ARRANGEMENT BASED ON A 39" x 65" SOLAR PANEL DIMENSIONS * CONFIRM FOR SITE CONDITIONS, SEPARATION BETWEEN PANELS 12" MINIMUM

Plan Review	App. By	Date
Building	J A GOMEZ	05/03/ 2013
Electric	NA	05/03/ 2013

Note: This plan is invalid unless accompanied by a Go SOLAR permit card and Go SOLAR permit document. Plans must be on job before any inspection will be made.

FSEC APPROVED PANELS (250 WATTS)
TO COMPLY WITH U.L.1703

1. 1SOLTECH MODEL SPM-240G
2. ASEC MODEL 250G6M6B
3. LIGHTWAY SOLAR MODEL LW250(29)
4. GREEN TRIPLEX MODEL PM250M00
5. MONOX MODEL LG250S1C

NOTE: LIST IS NOT INTENDED TO SHOW ALL CERTIFIED; EQUAL ALTERNATIVES MAY BE USED. SOLAR PANELS USERS ARE ENCOURAGED TO REVIEW MANUFACTURERS AND INSTALLERS DATA FROM FSEC LISTS.

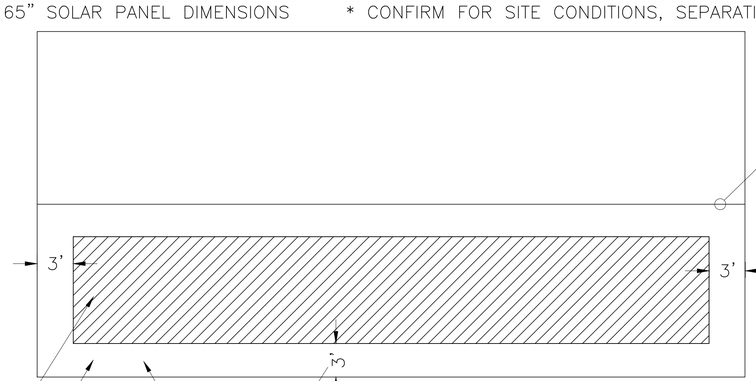

SOLAR PANEL OPTIMAL LOCATION IS IN AREA WITH SOUTHERN EXPOSURE. OTHER LOCATIONS WILL RESULT IN REDUCED CAPACITY.

SOLAR PANELS CANNOT BE INSTALLED IN THIS AREA

ROOF PLAN

NTS

* THE LESSER OF:
10% OF BUILDING MIN. DIMENSION
40% OF BUILDING HEIGHT
BUT NO LESS THAN 4% OF BUILDING MIN. DIMENSION OR 3'

N

LEGEND:

CAN BE INSTALLED

CANNOT BE INSTALLED *

Digitally signed by Juan Lapica
DN: c=US, st=Florida, l=Coral Gables, o=TYlin International, ou=Structural Deparmtent, cn=Juan Lapica, email=Juan.Lapica@tylin.com
Date: 2013.05.03 13:59:36 -04'00'

JUAN E. LAPICA, P.E.
LICENSE NO.34290
STRUCTURAL ENGINEER

TYLIN INTERNATIONAL
201 ALHAMBRA CIRCLE • SUITE 900
CORAL GABLES, FLORIDA
PHONE: (305) 567-1888 • FAX: (305) 567-1771
E.B.# 00002017
www.tylin.com
04/16/2013

CARTAYA & ASSOCIATES ARCHITECTS P.A.

3077 E. COMMERCIAL BLVD. SUITE 201
FT. LAUDERDALE, FLORIDA 33308
771-2724 FAX 776-4280

SEAL

AA C001388

PROJECT: PHOTOVOLTAIC SYSTEM PROTOTYPE DESIGN
GO SOLAR - BROWARD COUNTY
ENVIRONMENTAL PLANNING AND GROWTH MANAG. DEPT.

ALL REPORTS OF CARTAYA AND ASSOCIATES ARCHITECTS P.A. SHALL NOT BE USED OR REPRODUCED IN ANY MANNER OR FORM, IN WHOLE OR IN PART, WITHOUT THE PRIOR WRITTEN PERMISSION OF CARTAYA AND ASSOCIATES ARCHITECTS P.A. IT IS A VIOLATION OF LAW TO COPY OR ALTER THIS DOCUMENT IN WHOLE OR IN PART. IT IS ALSO A VIOLATION OF LAW FOR ANY PERSON, UNLESS ACTING UNDER THE DIRECTION OF A LICENSED ARCHITECT, TO ALTER THIS DOCUMENT IN ANY WAY. IF THIS DOCUMENT IS ALTERED, THE ARCHITECT ASSUMES NO RESPONSIBILITY FOR THE ALTERED DOCUMENT AND NOTIFY THE OFFICE OF AN INCURRENCE FOR ALTERATIONS.

TITLE: 7KW PLAN VIEW

REVISIONS

DATE: 04-16-2013
DRAWN BY: YR
CHECKED BY: JJ

JOB NO. 1236

SHEET: A-1
1 OF 7

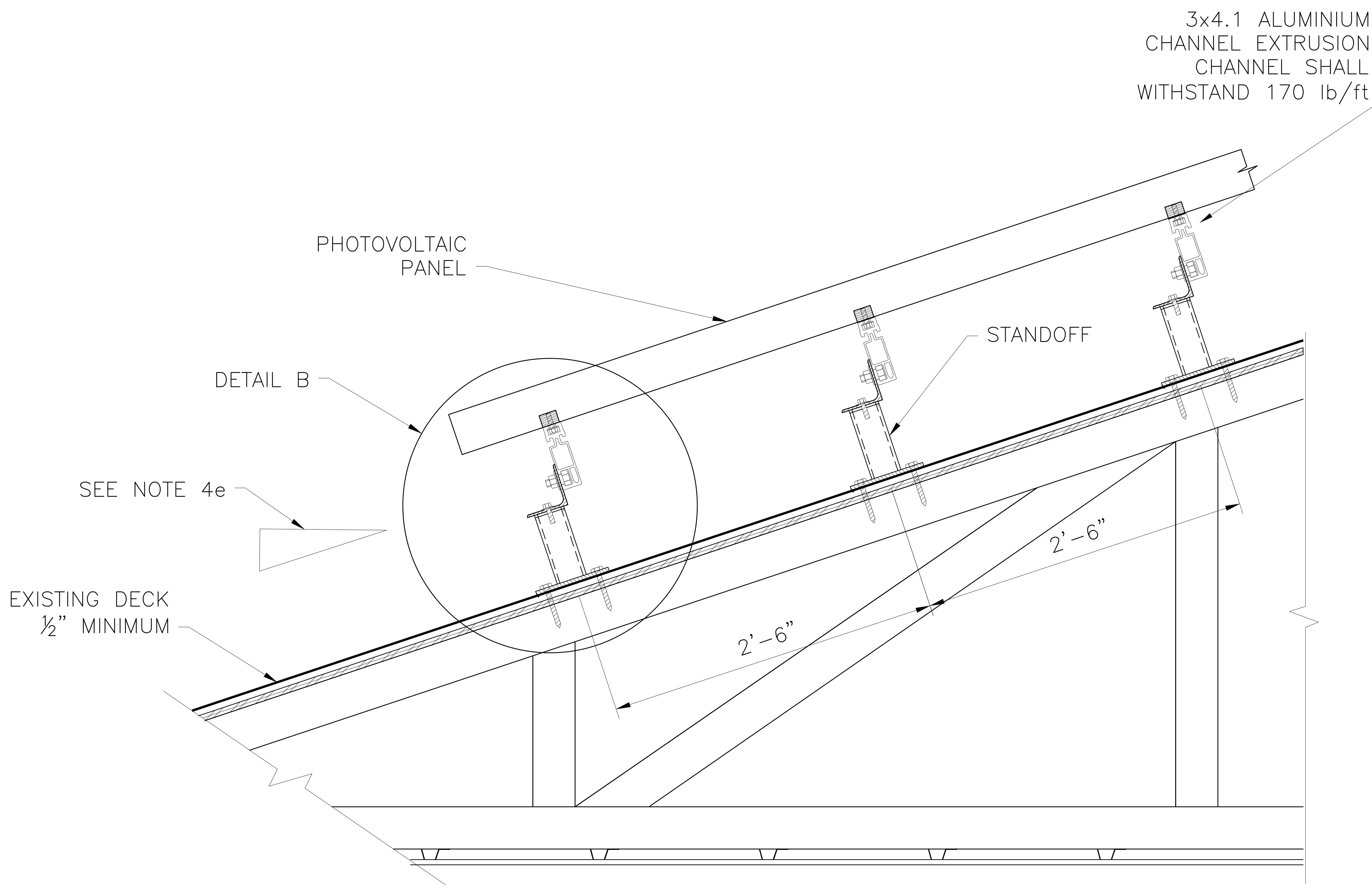

A/A-1 SECTION

SCALE: 1" = 1'-0"

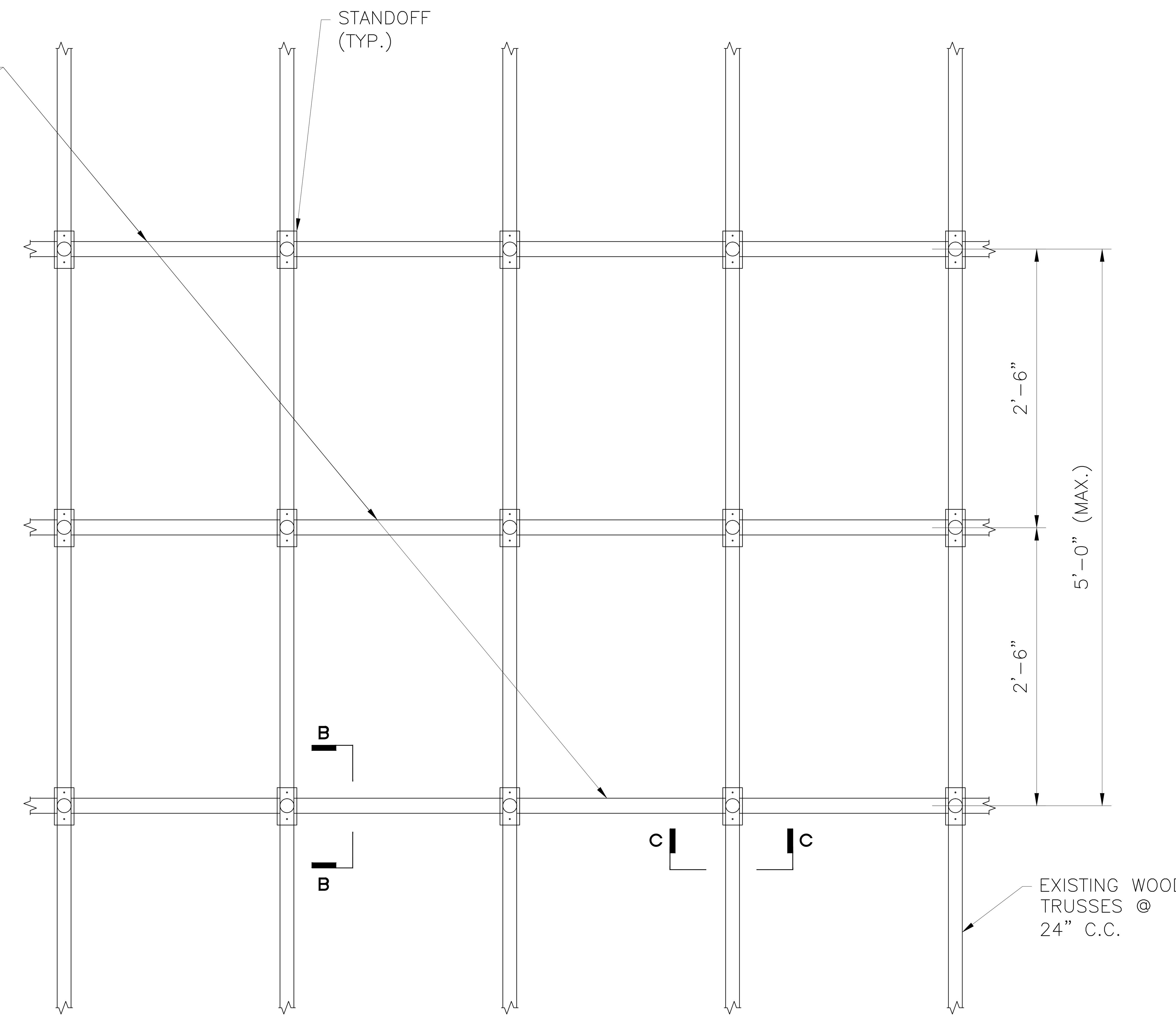

PARTIAL PLAN VIEW SOLAR PANEL ATTACHMENT

GENERAL NOTES:

1. DESIGN LOAD CRITERIA

a. FLORIDA BUILDING CODE 2010
b. ASCE 7-10, HURRICANE PRONE REGION
c. BASIC SPEED - 170 mph
d. EXPOSURE CATEGORY : C
e. RISK CATEGORY : II
f. DESIGN LOADS:

WIND LOADS
+56 PSF POSITIVE PRESSURE
-68 PSF UPLIFT

DEAD LOAD
20 PSF

2. STRUCTURAL BOLTS SHALL CONFORM TO ASTM A304 STAINLESS STEEL

3. STAND COMPONENTS TO BE MANUFACTURED BY UNIRAC.

4. CONSIDERATION:
a. THESE NOTES SET OUT THE PARAMETERS UNDER WHICH THE SOLAR PANELS MUST BE INSTALLED.
b. BROWARD COUNTY
c. RESIDENTIAL
d. 30' MAXIMUM HEIGHTS IN RESIDENTIAL ROOF
e. THE SLOPE OF THE ROOF MAY BE FROM 7° TO 45° MAX
f. SOLAR PANEL MUST WITHSTAND THE FOLLOWING WIND LOADS:
- DOWNWARD DIRECTION: +56 PSF
- UPWARD DIRECTION: -68 PSF

5. THIS DESIGN IS BASED ON A ROOF SYSTEM CONSISTING OF PRE-MANUFACTURED TRUSSES @ 24" O.C.

6. CONTRACTOR SHALL VERIFY THAT THE EXISTING ROOF STRUCTURAL SYSTEM IS IN GOOD CONDITION AND THAT TRUSSES WERE BUILT WITH STRUCTURAL SOUTHERN PINE OR A DENSER SPECIES; THAT THERE IS NO ROTTEN WOOD OR TERMITE INFESTATION

Plan Review	App. By	Date
Building	J A GOMEZ	05/03/2013
Electric	NA	05/03/2013

Note: This plan is invalid unless accompanied by a Go SOLAR permit card and Go SOLAR permit document. Plans must be on job before any inspection will be made.

JUAN E. LAPICA, P.E.
LICENSE NO.34290
STRUCTURAL ENGINEER

T·Y·LIN INTERNATIONAL
201 ALHAMBRA CIRCLE • SUITE 900
CORAL GABLES, FLORIDA
PHONE: (305) 567-1888 • FAX: (305) 567-1771
E.B.# 00002017
www.tylin.com
04/16/2013

CARTAYA & ASSOCIATES ARCHITECTS P.A.
3077 E. COMMERCIAL BLVD. SUITE 201
FT. LAUDERDALE, FLORIDA 33308
771-2724 FAX 776-4280

SEAL: AA C001388

PROJECT: PHOTOVOLTAIC SYSTEM PROTOTYPE DESIGN
GO SOLAR - BROWARD COUNTY
ENVIRONMENTAL PLANNING AND GROWTH MANAG. DEPT.

ALL DESIGNS AND DETAILS INDICATED OR REPRESENTED BY THIS DRAWING ARE FOR USE ON AND IN CONJUCTION WITH THE SPECIFIED PROJECT. THIS IS THE PROPERTY OF CARTAYA AND ASSOCIATES ARCHITECTS, P.A. AND SHALL NOT BE USED OR REPRODUCED IN WHOLE OR IN PART WITHOUT WRITTEN PERMISSION FROM A PRINCIPAL OF THE THE FIRM OR BE LIABLE FOR THE FULLEST LEGAL RECOURSE. THE CONTRACTOR SHALL VERIFY ALL EXISTING CONDITIONS AND DIMENSIONS AND NOTIFY THIS OFFICE OF ANY DISCREPANCIES PRIOR TO THE EXECUTION OF THE WORK. WRITTEN DIMENSIONS TAKE PRECEDENCE OVER SCALED DIMENSIONS.

REVISIONS:

TITLE: 7KW SECTION

DATE: 04-16-2013
DRAWN BY: YR
CHECKED BY: JJ

JOB NO: 1236

SHEET: A-2

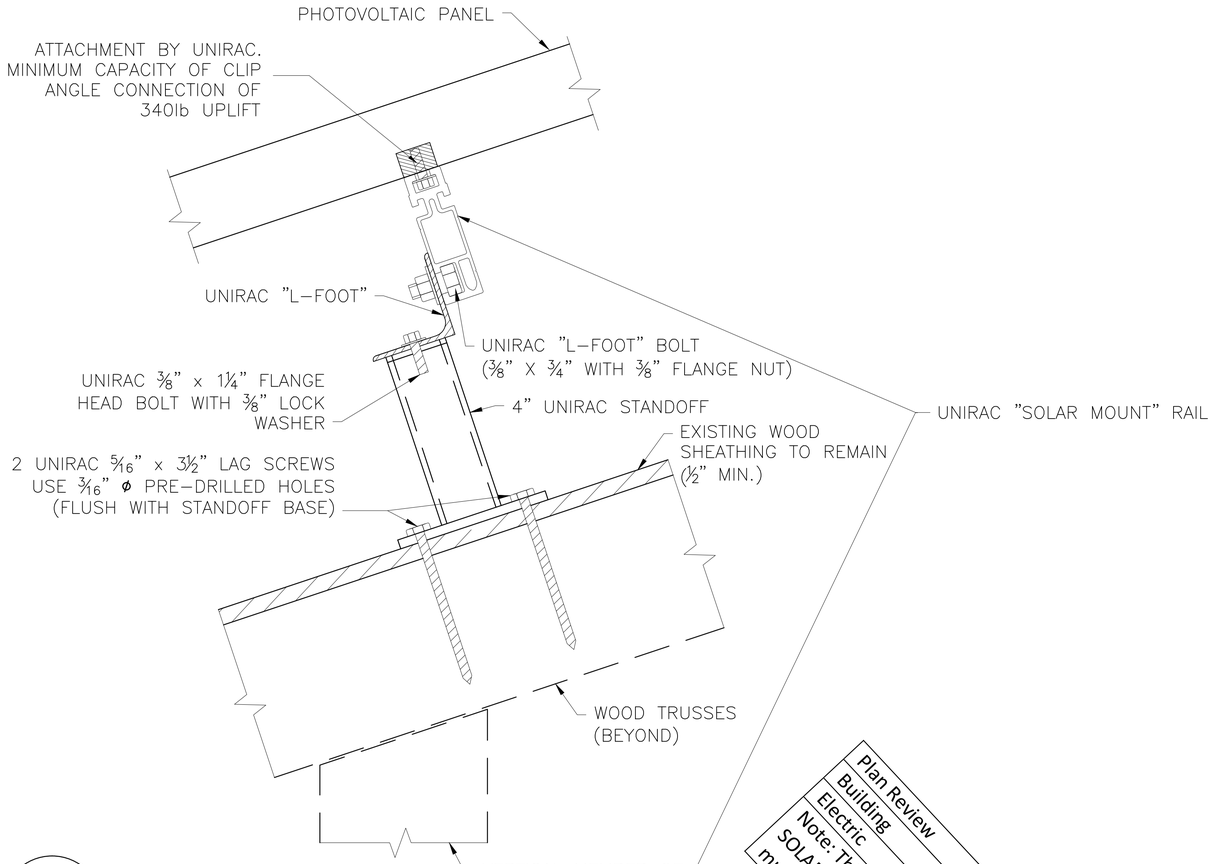

B / A-2 SECTION B-B
DETAIL D

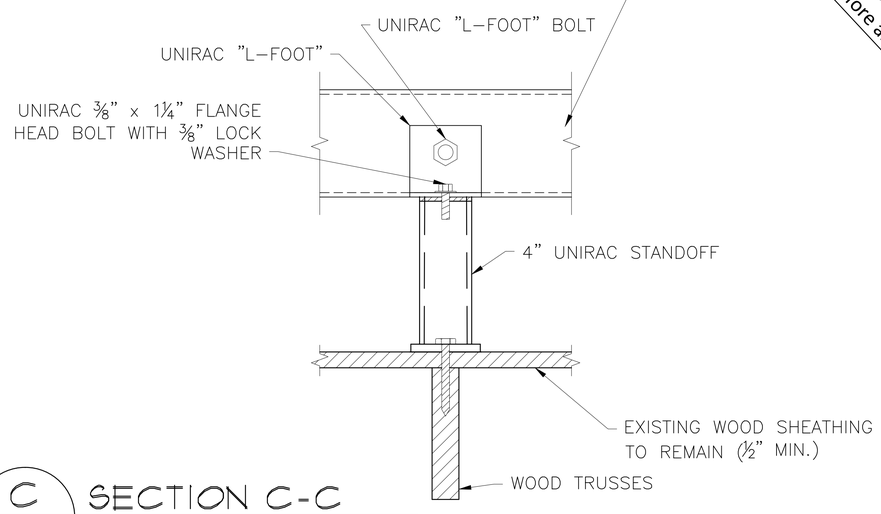

C / A-2 SECTION C-C

Plan Review
Building
Electric
Note: This plan is invalid unless accompanied by a Go SOLAR permit card and Go SOLAR permit document. Plans must be on job before any inspection will be made.

	App. By	Date
	J A GOMEZ	05/03/2013
	NA	05/03/2013

Installing SolarMount

The Unirac Code-Compliant Installation Instructions support applications for building permits for photovoltaic arrays using Unirac PV module mounting systems.

This manual, SolarMount Planning and Assembly, governs installations using the SolarMount and SolarMount HD (Heavy Duty) systems.

[3.1.] SolarMount® rail components

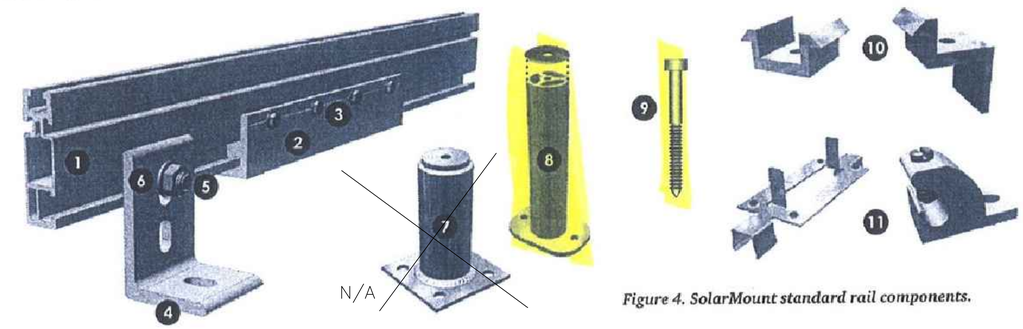

Figure 4. SolarMount standard rail components.

1. **Rail** – Supports PV modules. Use two per row of modules. 6105-T5 aluminum extrusion, anodized.
2. **Rail splice** – Joins and aligns rail sections into single length of rail. It can form either a rigid or thermal expansion joint, 8 inches long, predrilled. 6105-T5 aluminum extrusion, anodized.
3. **Self-drilling screw** – (No. 10 x ¾") – Use 4 per rigid splice or 2 per expansion joint. Galvanized steel.
4. **L-foot** – Use to secure rails either through roofing material to building structure or standoffs. Refer to loading tables for spacing. Note: Please contact Unirac for use and specification of double L-foot.
5. **L-foot bolt** (3/8" x ¾") – Use one per L-foot to secure rail to L-foot. 18-8A2 stainless steel.
6. **Flange nut** (3/8 ") – Use one per L-foot to secure rail to L-foot. 18-8A2 stainless steel.
7. N/A
8. **Aluminum two-peice standoff** (optional) (4" and 7") – Use one per L-foot. Two-piece: 6105-T5 aluminum extrusion. Includes 3/8" x 3/4" serrated flange bolt with EPDM washer for attaching L-foot, and two 5/16" lag bolts.
9. **Lag screw for L-foot** (5/16") – Attaches standoff to rafter.
10. **Top Mounting Clamps**
11. **Top Mounting Grounding Clips and Lugs**

lock washer for attaching L-foot. Flashings: Use one per standoff. Unirac offers appropriate flashings for both standoff types.
Note: There is also a flange type standoff that does not require an L-foot.

Installer supplied materials:

- **Lag screw for L-foot** – Attaches L-foot or standoff to rafter. Determine the length and diameter based on pull-out values. If lag screw head is exposed to elements, use stainless steel. Under flashings, zinc plated hardware is adequate.
- **Waterproof roofing sealant** – Use a sealant appropriate to your roofing material. Consult with the company currently providing warranty of roofing.

NOTES:

A. THIS DESIGN IS BASED ON A UNIRAC SUPPORT SYSTEM AND WITHIN THE MIDDLE THIRD OF THE WIDTH OF THE RAFTER
B. THREAD MUST BE EMBEDDED IN THE SIDE GRAIN OF A RAFTER
C. INSTALL LAG BOLTS WITH HEAD AND WASHER FLUSH TO SURFACE (NO GAP), DO NOT OVER TIGHTEN
D. CONTRACTOR TO PRE–DRILL WOOD TRUSS PRIOR TO INSTALLATION OF LAG SCREWS AS INDICATED

JUAN E. LAPICA, P.E.
LICENSE NO.34290
STRUCTURAL ENGINEER

TYLIN INTERNATIONAL
201 ALHAMBRA CIRCLE • SUITE 900
CORAL GABLES, FLORIDA
PHONE: (305) 567-1888 • FAX: (305) 567-1771
E.B.# 00002017
www.tylin.com
04/16/2013

CARTAYA & ASSOCIATES ARCHITECTS P.A.
3077 E. COMMERCIAL BLVD. SUITE 201
FT. LAUDERDALE, FLORIDA 33308
771-2724 FAX 776-4280
AA C001388

PROJECT: PHOTOVOLTAIC SYSTEM PROTOTYPE DESIGN
GO SOLAR - BROWARD COUNTY
ENVIRONMENTAL PLANNING AND GROWTH MANAG. DEPT.

ALL WORK TO BE DONE IN ACCORDANCE WITH THE 2010 FBC AND ALL OTHER APPLICABLE CODES AND ORDINANCES. DO NOT SCALE DRAWINGS. CONTRACTOR SHALL VERIFY ALL DIMENSIONS AND CONDITIONS ON THE JOB AND REPORT ANY DISCREPANCIES TO ARCHITECT BEFORE PROCEEDING WITH WORK. ARCHITECT'S DRAWINGS AND SPECIFICATIONS AS INSTRUMENTS OF SERVICE ARE THE PROPERTY OF THE ARCHITECT AND ARE TO BE RETURNED UPON REQUEST. ALL RIGHTS RESERVED. REPRODUCTION OR USE WITHOUT WRITTEN PERMISSION IS PROHIBITED. ALL NOTES, THE OWNER OF ANY DISCREPANCIES PRIOR TO THE EXECUTION OF THE WORK. WRITTEN DIMENSIONS TAKE PRECEDENCE OVER SCALED DIMENSIONS.

REVISIONS

DATE: 04-16-2013
DRAWN BY: YR
CHECKED BY: JJ

TITLE: 7KW SECTION

JOB NO: 1236

SHEET: A-3
3 OF 7

WIND LOAD PRESSURE

Using Rooftop Structures and Equipments (29.5.1 Sheet 308) Broward County

Residential: II risk category. (Table 1.5.1/ Sheet 2)

V= 170 Mph

K_d= 0.85 (Table 26.6-1/ Sheet 250)
K_{zt}= 1.0

Z= 15′ → K_z = 0.85 (Table 29.3-1/ Sheet 310)
Z= 20′ → K_z = 0.90
Z= 25′ → K_z = 0.94
Z= 30′ → K_z = 0.98

$Q = 0.00256\, K_z \times K_{zt} \times K_d \times V^2$

$q_{15'}$ = 53.4 lb/ft^2
$q_{20'}$ = 56.6 lb/ft^2
$q_{25'}$ = 59.1 lb/ft^2
$q_{30'}$ = 61.6 lb/ft^2

Note:

1- We use zone 1 for the calculation of wind load, assuming that the panels may be installed in zone 1 .

2- We consider that the panels are not part of the roof and GC_{pi} = ± 0

Θ≤7° (Gable Roof) Fig 30.A-2A/ Sheet 336
GC_{p123} = +0.3
GC_{p1} = -1.0

7°<Θ≤27° (Gable/ Hip Roof) Fig 30.4-2B/ Sheet 337)
GC_{p123} = +0.5
GC_{p1} = -0.90

27°<Θ≤45° (Gables Roof) Fig 30.4-2C/ Sheet 338
GC_{p123} = +0.9 **(This coefficient value is the most critical for the downward load.)**
GC_{p1} = -1.0

$P = q_h\, [(GC_p) - (GC_{pi})]$

27°<Θ≤45° h = 30′
p_{123} = 61.6[0.9-(-0)] = +56 lb/ft^2 **(Downward Pressure)**

Θ≤7° h = 30′
p_1 = 61.6[-1.1-(+0] = -68 lb/ft^2 **(Upward Pressure)**

27°<Θ≤45° (Monoslope roof) Fig 30.4-5A/ Sheet 341
GC_{p123} = +0.3
GC_{p1} = -1.1 **(This coefficient value is the most critical for the upward load.)**

Lag Screw Design

1. Direct Uplift

A = 2.5′ < 2′ = 5 SF 5 x 68 = 340 lb/connection
P = 340lb / 2 screws
170lb / screw ⇒ 1" penetration
⇒ Use 5/16" Ø flat head lag screws
Max. capacity = 0.7 x 307 = 215lb > 170 lb OK
307lb ⇒ Unirac catalog for "dry" condition
0.7 = Wet use factor

2. Calculations for compliance of 1620.6 FBC

- Shear

P = 3.1 x (2+3)/12 x 2 x 53.4 = 138lb
⇒ 2 connections / 4 screws
34.5lb / screw

- Moment

Southern pine specific gravity 0.55

$2'a = \frac{(\omega' þ)z'}{(\omega' þ)\cos^2\alpha + z'\sin\alpha}$ (11.4-1 NDS)

$z' = 140$ lb (NDS Table 11K)

$\omega = 307$ lb/in − 5/16″ ⌀ (NDS Table 11.2A)

$M = 138 \times 8'' = 1080$ in.lb $1080/2 = 540$ in.lb / connection

T/C = 540 / 2.75 = 196 lb

Total withdrawal = 196 + 170 = 366 lb

Total shear = 34.5 lb α = 85 °

$2'a = \frac{(307 \times 3)140}{(307 \times 3)0.09 + 180 \times 1} = 578$ lb

578 x 0.7 = 404 > 366 lb

Plan Review		
Building	App. By	Date
Electric	J A GOMEZ	05/03/ 2013
NA		05/03/ 2013

Note: This plan is invalid unless accompanied by a Go SOLAR permit card and Go SOLAR permit document. Plans must be on job before any inspection will be made.

JUAN E. LAPICA, P.E.
LICENSE NO.34290
STRUCTURAL ENGINEER

T·Y·LIN INTERNATIONAL
201 ALHAMBRA CIRCLE • SUITE 900
CORAL GABLES, FLORIDA
PHONE: (305) 567-1888 • FAX: (305) 567-1771
E.B.# 00002017
www.tylin.com
04/16/2013

CARTAYA & ASSOCIATES ARCHITECTS P.A.
3077 E. COMMERCIAL BLVD. SUITE 201
FT. LAUDERDALE, FLORIDA 33308
771-2724 FAX 776-4280
AA C001388

SEAL

PROJECT: PHOTOVOLTAIC SYSTEM PROTOTYPE DESIGN
GO SOLAR - BROWARD COUNTY
ENVIRONMENTAL PLANNING AND GROWTH MANAG. DEPT.

ALL REPORTS AND DRAWINGS AS INSTRUMENTS OF SERVICE ARE AND SHALL REMAIN THE PROPERTY OF CARTAYA & ASSOCIATES, P.A. WHETHER THE PROJECT FOR WHICH THEY WERE MADE IS EXECUTED OR NOT. THE REPRODUCTION, PUBLICATION OR USE BY OTHERS OF ANY DRAWING OR DOCUMENT WITHOUT WRITTEN PERMISSION IS PROHIBITED. ALL REPORTS AND DRAWINGS ARE TO BE RETURNED UPON REQUEST. DO NOT SCALE DRAWINGS. ALL DIMENSIONS MUST BE VERIFIED ON THE JOB BEFORE ANY WORK IS BEGUN OR ORDERED. ANY DISCREPANCIES MUST BE REPORTED TO THE ARCHITECT IMMEDIATELY. ALL WORK SHALL BE IN ACCORDANCE WITH THE 2010 FBC AND ALL OTHER APPLICABLE CODES AND ORDINANCES. ANY DEVIATION FROM THE DRAWINGS OR SPECIFICATIONS WITHOUT WRITTEN AUTHORIZATION MAY NOT BE MADE WITHOUT THE ARCHITECT'S PRIOR WRITTEN APPROVAL. ANY DEVIATION MAY RESULT IN THE REVOCATION OF THE BUILDING PERMIT. ALL DIMENSIONS TO BE VERIFIED ON THE JOB. WRITTEN DIMENSIONS TAKE PRECEDENCE OVER SCALED DIMENSIONS.

REVISIONS

DATE: 04-16-2013
DRAWN BY: YR
CHECKED BY: JJ

TITLE: 7KW CALCS

JOB NO. 1236

SHEET: A-4
4 OF 7

Part II. Procedure to Select Rail Span and Rail Type

[2.1.] Using Standard Beam Calculations, Structural Engineering Methodology

The procedure to determine the Unirac SolarMount series rail type and rail span uses standard beam calculations and structural engineering methodology. The beam calculations are based on a simply supported beam conservatively, ignoring the reductions allowed for supports of continuous beams over multiple supports. Please refer to **Part I** for more information on beam calculations, equations and assumptions. If beams are installed perpendicular to the eaves on a roof steeper than a 4/12 pitch in an area with a ground snow load greater than 30psf, then additional analysis is required for side loading on the roof attachment and beam.

In using this document, obtaining correct results is dependent upon the following:

1. Obtain the *Snow Load* for your area from your local building official.

2. Obtain the *Design Wind Load,* p_{net}. See **Part I** (Procedure to Determine the Design Wind Load) for more information on calculating the *Design Wind Load*.
3. ***Please Note:*** The terms rail span and footing spacing are interchangeable in this document. See **Figure 3** for illustrations.

4. To use **Table 8** and **Table 9** the *Dead Load* for your specific installation must be less than 5 psf, including modules and Unirac racking systems. If the Dead Load is greater than 5 psf, see your Unirac distributor, a local structural engineer or contact Unirac.

The following procedure will guide you in selecting a Unirac rail for a flush mount installation. It will also help determine the design loading imposed by the Unirac PV Mounting Assembly that the building structure must be capable of supporting.

Step 1: Determine the *Total Design Load*

The *Total Design Load, P (psf)* is determined using ASCE 7-10 2.4.1 (ASD Method equations 3,5,6 and 7) by adding the *Snow Load*[1], S (psf), *Design Wind Load*, p_{net} *(psf)* from **Part I, Step 9** and the *Dead Load (psf)*. Both Uplift and Downforce Wind Loads calculated in **Step 9 of Part 1** must be investigated. Use **Table 7** to calculate the Total Design Load for the load cases. Use the maximum absolute value of the three downforce cases and the uplift case for sizing the rail. Use the uplift case only for sizing lag bolts pull out capacities **(Part II, Step 6)**. Use the following equations or **Table 7**.

$P\ (psf) = 1.0D + 1.0S^1$
N/A

$P\ (psf) = 1.0D + 1.0p_{net}$
20+56=76 psf

$P\ (psf) = 1.0D + 0.75S^1 + 0.75p_{net}$
20+(0.75 x 56)=62 psf

$P\ (psf) = 0.6D + 1.0p_{net}$
0.6 x 20-68=-56 psf

D = Dead Load (psf)
20 psf

S = Snow Load (psf)
N/A

p_{net} *= Design Wind Load (psf) (Positive for downforce, negative for uplift)*

The maximum Dead Load, D (psf), is 5 psf based on market research and internal data.

[1] *Snow Load Reduction - The snow load can be reduced according to Chapter 7 of ASCE 7-05. The reduction is a function of the roof slope, Exposure Factor, Importance Factor and Thermal Factor. Please refer to Chapter 7 of ASCE 7-05 for more information.*

Figure 3. Rail span and footing spacing are interchangeable.

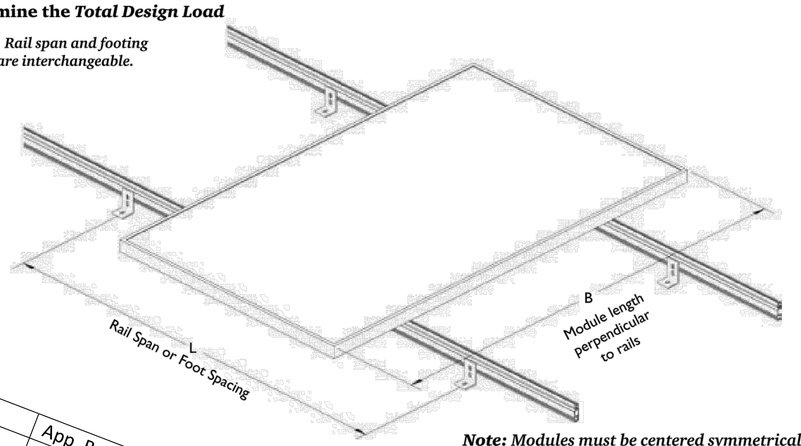

***Note:** Modules must be centered symmetrically on the rails (+/- 2*), as shown in Figure 3.*

Plan Review	App. By	Date
Building	J A GOMEZ	05/03/ 2013
Electric	NA	05/03/ 2013

Note: This plan is invalid unless accompanied by a Go SOLAR permit card and Go SOLAR permit document. Plans must be on job before any inspection will be made.

Table 7. ASCE 7 ASD Load Combinations

Description	Variable	Downforce Case 1	Downforce Case 2	Downforce Case 3	Uplift	units
Dead Load	D	1.0 x	1.0 x	1.0 x	0.6 x	psf
Snow Load	S	1.0 x + _____		0.75 x + _____		psf
Design Wind Load	Pnet		1.0 x + _____	0.75 x + _____	1.0 x -	psf
Total Design Load	P	N/A	76	62	-56	psf

Note: Table to be filled out or attached for evaluation.

Step 2: Determine the *Distributed Load on the rail, w (plf)*

Determine the *Distributed Load, w (plf)*, by multiplying the module length, B (ft), by the *Total Design Load, P (psf)* and dividing by two. Use the maximum absolute value of the three downforce cases and the Uplift Case. We assume each module is supported by two rails.

$$w = PB/2$$

w = Distributed Load (pounds per linear foot, plf)

B = Module Length Perpendicular to Rails (ft)

P = Total Design Pressure (pounds per square foot, psf)

Step 3: Determine *Rail Span/ L-Foot Spacing*

Using the *distributed load, w*, from Part II, **Step 2**, look up the *allowable spans, L*, for each Unirac rail type, SolarMount (SM) and SolarMount Heavy Duty (HD).

The L-Foot SolarMount Series Rail Span Table uses a single L-foot connection to the roof, wall or stand-off. Please refer to the **Part III** for more installation information.

CASE 2 =76 x 2.5/2 = 95 pounds

UPLIFT = -56 x 2.5/2 = 70 pounds

therefore USE UNIRACK SolarMount

Table 8. L-Foot SolarMount Series Rail Span

SM - SolarMount **HD - SolarMount Heavy Duty**

Span (ft)	Distributed Load (pounds/linear foot)															
	20	25	30	40	50	60	80	100	120	140	160	180	200	220	240	260
2	SM	SM	SM	SM	SM	SM	SM	SM	SM	SM	SM	SM	SM	SM	SM	SM
2.5	SM	SM	SM	SM	SM	SM	SM	SM	SM	SM	SM	SM	SM	HD	HD	HD
3	SM	SM	SM	SM	SM	SM	SM	SM	SM	SM	SM	HD	HD	HD	HD	HD
3.5	SM	SM	SM	SM	SM	SM	SM	SM	SM	SM	HD	HD	HD	HD		
4	SM	SM	SM	SM	SM	SM	SM	SM	SM	HD	HD	HD	HD			
4.5	SM	SM	SM	SM	SM	SM	SM	SM	HD	HD	HD					
5	SM	SM	SM	SM	SM	SM	SM	SM	HD	HD	HD					
5.5	SM	SM	SM	SM	SM	SM	SM	HD	HD	HD						
6	SM	SM	SM	SM	SM	SM	SM	HD	HD							
6.5	SM	SM	SM	SM	SM	SM	SM	HD	HD							
7	SM	SM	SM	SM	SM	SM	HD	HD								
7.5	SM	SM	SM	SM	SM	SM	HD	HD								
8	SM	SM	SM	SM	SM	SM	HD	HD								
8.5	SM	SM	SM	SM	SM	HD	HD									
9	SM	SM	SM	SM	HD	HD	HD									
9.5	SM	SM	SM	SM	HD	HD	HD									
10	SM	SM	SM	HD	HD	HD	HD									
10.5	SM	SM	SM	HD	HD	HD										
11	SM	SM	HD	HD	HD	HD										
11.5	SM	HD	HD	HD	HD	HD										
12	SM	HD	HD	HD	HD	HD										

JUAN E. LAPICA, P.E.
LICENSE NO.34290
STRUCTURAL ENGINEER

T·Y·LIN INTERNATIONAL
201 ALHAMBRA CIRCLE • SUITE 900
CORAL GABLES, FLORIDA
PHONE: (305) 567-1888 • FAX: (305) 567-1771
E.B.# 00002017
www.tylin.com
04/16/2013

CARTAYA & ASSOCIATES
ARCHITECTS P.A.
3077 E. COMMERCIAL BLVD. SUITE 201
FT. LAUDERDALE, FLORIDA 33308
771-2724 FAX 776-4280
AA C001388

PROJECT: PHOTOVOLTAIC SYSTEM PROTOTYPE DESIGN
GO SOLAR - BROWARD COUNTY
ENVIRONMENTAL PLANNING AND GROWTH MANAG. DEPT.

IT IS THE OWNER'S RESPONSIBILITY TO REPORT ANY DEFECTS IN THE WORK OR ANOMALIES IN THE DRAWINGS TO THE ARCHITECT IMMEDIATELY. THIS DRAWING IS THE PROPERTY OF THE ARCHITECT AND SHALL NOT BE USED OR REPRODUCED IN ANY MANNER WITHOUT THE WRITTEN PERMISSION OF THE ARCHITECT. THIS DRAWING IS TO BE USED FOR THE PROJECT AND SITE SPECIFIED HEREIN AND SHALL NOT BE USED ON OTHER PROJECTS. THIS DRAWING IS TO BE FOLLOWED IN ITS ENTIRETY. ANY DEVIATIONS, ALTERATIONS OR MODIFICATIONS TO THE DRAWING MUST BE REPORTED TO THE ARCHITECT IMMEDIATELY. FAILURE TO REPORT ANY DEFECTS, ALTERATIONS OR MODIFICATIONS TO THE ARCHITECT IMMEDIATELY SHALL RELIEVE THE ARCHITECT OF ANY RESPONSIBILITY. DO NOT SCALE DRAWINGS. USE ONLY WRITTEN DIMENSIONS. FAILURE TO COMPLY WITH THE ABOVE WILL BE CONSIDERED A VIOLATION OF THE ARCHITECT'S RIGHTS AND MAY NOTIFY THE OWNER OF ANY DISCREPANCIES PRIOR TO THE EXECUTION OF THE WORK.

SEAL

REVISIONS

DATE: 04-16-2013
DRAWN BY: YR
CHECKED BY: JJ

TITLE: 7KW CALCS

JOB NO: 1236

SHEET: A-5

5 OF 7

Step 4: Select Rail Type

Selecting a span and rail type affects the price of your installation. Longer spans produce fewer wall or roof penetrations. However, longer spans create higher point load forces on the building structure. A point load force is the amount of force transferred to the building structure at each connection.

It is the installer's responsibility to verify that the building structure is strong enough to support the point load forces.

Step 5: Determine the Downforce *Point Load, R (lbs)*, at each connection based on rail span

When designing the Unirac Flush Mount Installation, you must consider the downforce Point Load, R (lbs) on the roof structure.

The *Downforce, Point Load, R (lbs)*, is determined by multiplying the *Total Design Load, P (psf)* (Step 1) by the *Rail Span, L (ft)* (Step 3) and the *Module Length Perpendicular to the Rails, B (ft)* divided by two.

$$R\ (lbs) = P.L.B/2$$

R = Point Load (lbs)

P = Total Design Load (psf)

L = Rail Span (ft)

B = Module Length Perpendicular to Rails (ft)

It is the installer's responsibility to verify that the building structure is strong enough to support the maximum point loads calculated according to Step 5.

Plan Review
Building
Electric
Note: This plan is invalid unless accompanied by a Go SOLAR permit card and Go SOLAR permit document. Plans must be on job before any inspection will be made.
App. By: J A GOMEZ
Date: 05/03/2013
NA
05/03/2013

Table 10. Downforce Point Load Calculation

Total Design Load (downforce) (max of case 1, 2 or 3)	P		95	psf	Step 1
Module length perpendicular to rails	B	x	2	ft	
Rail Span	L	x	2.5	ft	Step 4
			475 /2		
Downforce Point Load	R		238	lbs	OK

Step 6: Determine the Uplift Point Load, R (lbs), at each connection based on rail span

You must also consider the Uplift Point Load, R (lbs), to determine the required lag bolt attachment to the roof (building) structure.

Table 11. Uplift Point Load Calculation

Total Design Load (uplift)	P		-70	psf	Step 1
Module length perpendicular to rails	B	x	2	ft	
Rail Span	L	x	2.5	ft	Step 4
			350 /2		
Uplift Point Load	R		175	lbs	

Table 12. Lag pull-out (withdrawal) capacities (lbs) in typical roof lumber (ASD)

	Specific gravity	Lag screw specifications: 5/16" shaft,* per inch thread depth
Douglas Fir, Larch	0.50	266
Douglas Fir, South	0.46	235
Engelmann Spruce, Lodgepole Pine (MSR 1650 f & higher)	0.46	235
Hem, Fir, Redwood (close grain)	0.43	212
Hem, Fir (North)	0.46	235
Southern Pine	0.55	307
Spruce, Pine, Fir	0.42	205
Spruce, Pine, Fir (E of 2 million psi and higher grades of MSR and MEL)	0.50	266

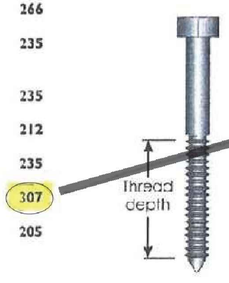

Sources: American Wood Council, NDS 2005, Table 11.2A, 11.3.2A.

Notes: (1) Thread must be embedded in the side grain of a rafter or other structural member integral with the building structure.
(2) Lag bolts must be located in the middle third of the structural member.
(3) These values are not valid for wet service.
(4) This table does not include shear capacities. If necessary, contact a local engineer to specify lag bolt size with regard to shear forces.
(5) Install lag bolts with head and washer flush to surface (no gap). Do not over-torque.
(6) Withdrawal design values for lag screw connections shall be multiplied by applicable adjustment factors if necessary. See Table 10.3.1 in the American Wood Council NDS for Wood Construction.

*Use flat washers with lag screws.

Use Table 12 to select a lag bolt size and embedment depth to satisfy your Uplift Point Load Force, R (lbs), requirements.

It is the installer's responsibility to verify that the substructure and attachment method is strong enough to support the maximum point loads calculated according to Step 5 and Step 6.

FOR WET CONDITION
0.7 x 307 = 215 lbs

JUAN E. LAPICA, P.E.
LICENSE NO.34290
STRUCTURAL ENGINEER

TYLIN INTERNATIONAL
201 ALHAMBRA CIRCLE • SUITE 900
CORAL GABLES, FLORIDA
PHONE: (305) 567-1888 • FAX: (305) 567-1771
E.B.# 00002017
www.tylin.com
04/16/2013

CARTAYA & ASSOCIATES ARCHITECTS P.A.
3077 E. COMMERCIAL BLVD. SUITE 201
FT. LAUDERDALE, FLORIDA 33308
771-2724 FAX 776-4280
AA C001388

PROJECT: PHOTOVOLTAIC SYSTEM PROTOTYPE DESIGN
GO SOLAR - BROWARD COUNTY
ENVIRONMENTAL PLANNING AND GROWTH MANAG. DEPT.

TITLE: 7KW CALCS

REVISIONS

DATE: 04-16-2013
DRAWN BY: YR
CHECKED BY: JJ

JOB NO: 1236

SHEET: A-6
6 OF 7

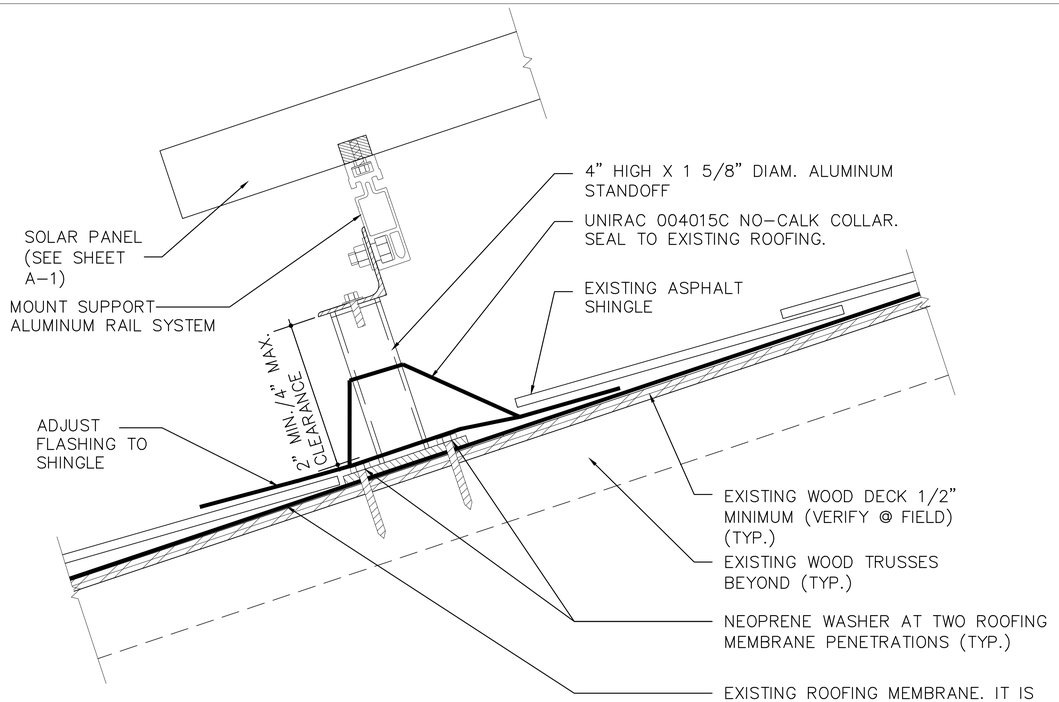

1 / A-5 ASPHALT SHINGLE ROOFING WATERPROOFING DETAIL

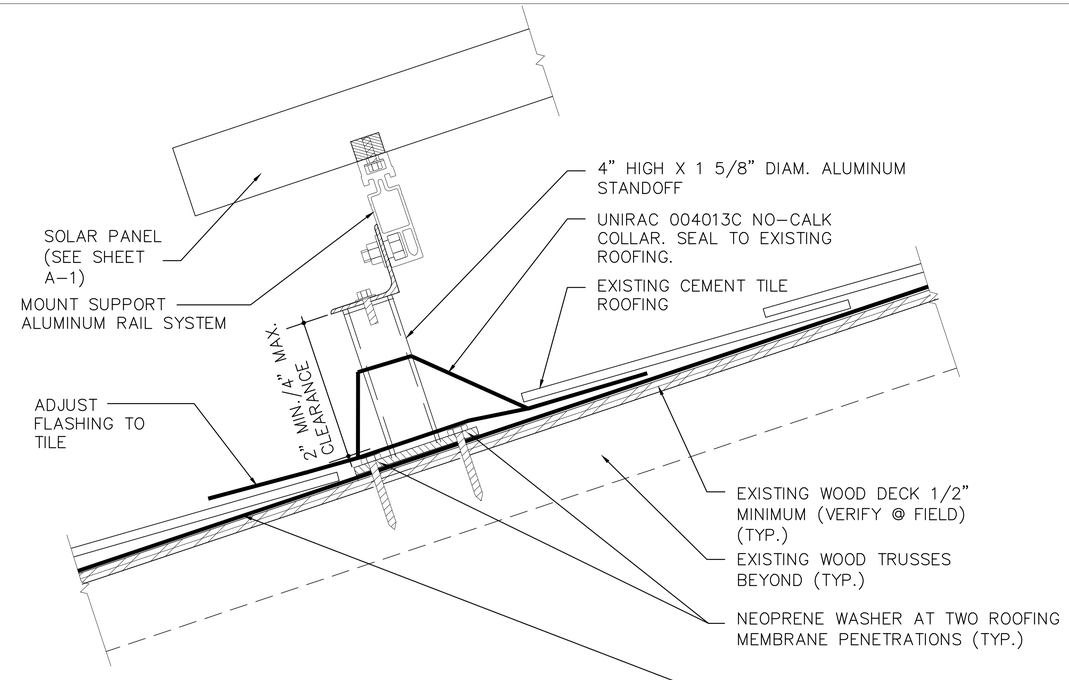

2 / A-5 CEMENT TILE ROOFING WATERPROOFING DETAIL

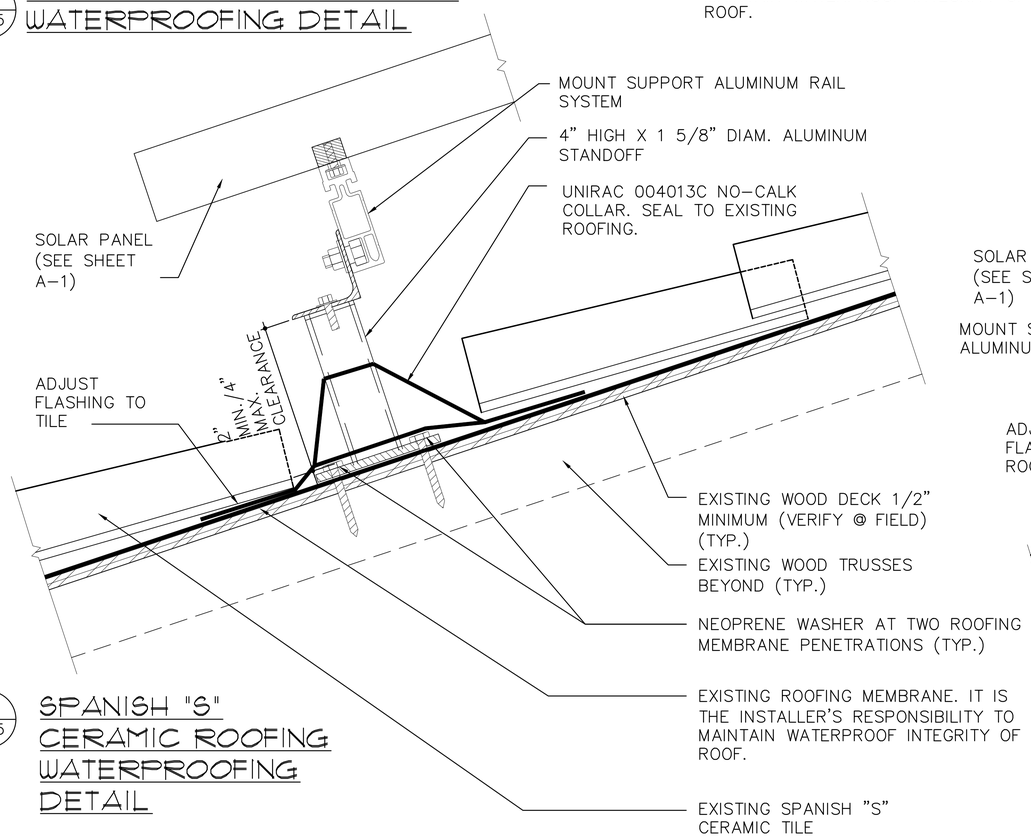

3 / A-5 SPANISH "S" CERAMIC ROOFING WATERPROOFING DETAIL

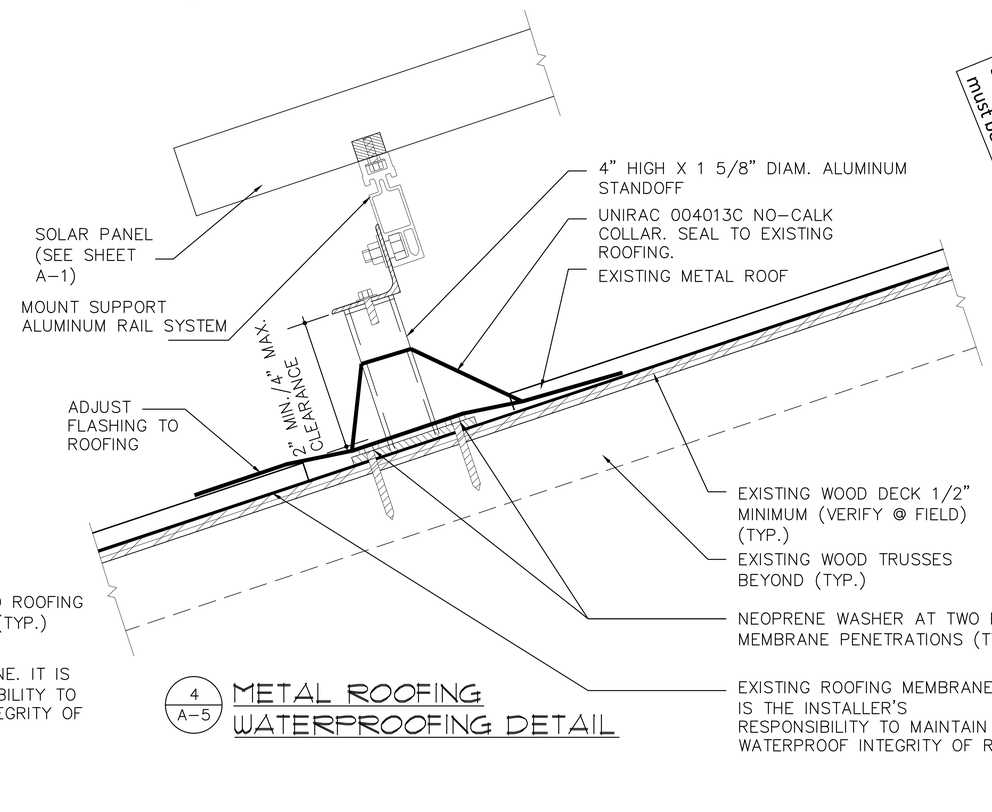

4 / A-5 METAL ROOFING WATERPROOFING DETAIL

Plan Review	App. By	Date
Building	J A GOMEZ	05/03/ 2013
Electric	NA	05/03/ 2013

Note: This plan is invalid unless accompanied by a Go SOLAR permit card and Go SOLAR permit document. Plans must be on job before any inspection will be made.

JUAN E. LAPICA, P.E.
LICENSE NO.34290
STRUCTURAL ENGINEER

TYLIN INTERNATIONAL
201 ALHAMBRA CIRCLE • SUITE 900
CORAL GABLES, FLORIDA
PHONE: (305) 567-1888 • FAX: (305) 567-1771
E.B.# 00002017
www.tylin.com
04/16/2013

CARTAYA & ASSOCIATES ARCHITECTS P.A.
3077 E. COMMERCIAL BLVD. SUITE 201
FT. LAUDERDALE, FLORIDA 33308
771-2724 FAX 776-4280
AA C001388

SEAL

PROJECT: PHOTOVOLTAIC SYSTEM PROTOTYPE DESIGN
GO SOLAR - BROWARD COUNTY
ENVIRONMENTAL PLANNING AND GROWTH MANAG. DEPT.

IT IS VIOLATION OF THE LAW FOR ANY PERSON, UNLESS THEY ARE ACTING UNDER THE DIRECTION OF A LICENSED PROFESSIONAL ENGINEER, TO ALTER THIS DOCUMENT IN ANY WAY. THIS DOCUMENT IS INSTRUMENT OF SERVICE AND IS THE PROPERTY OF CARTAYA AND ASSOCIATES ARCHITECTS, P.A. AND SHALL NOT BE USED OR REPRODUCED IN WHOLE OR IN PART WITHOUT WRITTEN CONSENT. THIS PLAN IS NOT TO BE SCALED. THE CONTRACTOR SHALL VERIFY ALL DIMENSIONS, DATUMS AND CONDITIONS ON THE JOB SITE AND NOTIFY THE OFFICE OF ANY DISCREPANCIES PRIOR TO THE EXECUTION OF THE WORK. WRITTEN DIMENSIONS TAKE PRECEDENCE OVER SCALED DIMENSIONS.

TITLE: 7KW WATERPROOFING DETAILS

REVISIONS:

DATE: 04-16-2013
DRAWN BY: YR
CHECKED BY: JJ

JOB NO: 1236

SHEET: A-7
7 OF 7