STANDARD ELECTRICAL DIAGRAM

	Standard Diagram for Homes 200 amp Panel with Back Fed Brk.

TAG DESCRIPTION	
1 SOLAR PV MODULE	9 SIZE BACK FED BREAKER. Per Mfg..
2 PV ARRAY	10 ALL BACK FED BRK. SHALL BE LINE-LINE LISTED
3 J-BOX Per NEC	11 DEFAULT TO 15 Amps Per Mfg.
4 COMBINER Per Mfg. in INVERTER	12 Max DC VD Shall be<= 2% Maximum Distance 100' or less
5 DC DISCONNECT in INVERTER	13 Modules shall be listed to UL Standards 1703
6 DC/AC INVERTER Per Mfg..	14 Inverters shall be listed to UL Standards 1741
7 AC DISC. If used shall Comply with NEC 690.15,16,17	15 BACK FED BRK. SHALL NOT BE MORE THAN 20% OF BUS
	16 DEFAULT TO 8.9 AMPS. PER. Mfg.
	17 90c wire shall be used. And sized at 75c
8 SERVICE PANEL Exist. 200a 240v	18 EGC Smaller Than # 6 AWG shall be protected NEC 250.120 C
	19 USE-2 or PV WIRE

N0. of Strings	1	No. of Modules	12
3000	T-W	444	Voc
3,000	T-W	444	T-V
250	W	37	Voc
12	Ea.	12	Voc

1 STRING AND 12 MODULES	
3,000 Total Wattage	
1Ø 240v	
20 690.45 (A) Size of EGC	
21 Within sight of INVERTER or lockable	
22 690.64 (B) (7) Inverter Output Conn.	

FROM MODULE TO J-BOX		
Voltage	360	Wire 90c
Wattage Mod Array 1	3,000	#12
Total Wattage	3,000	

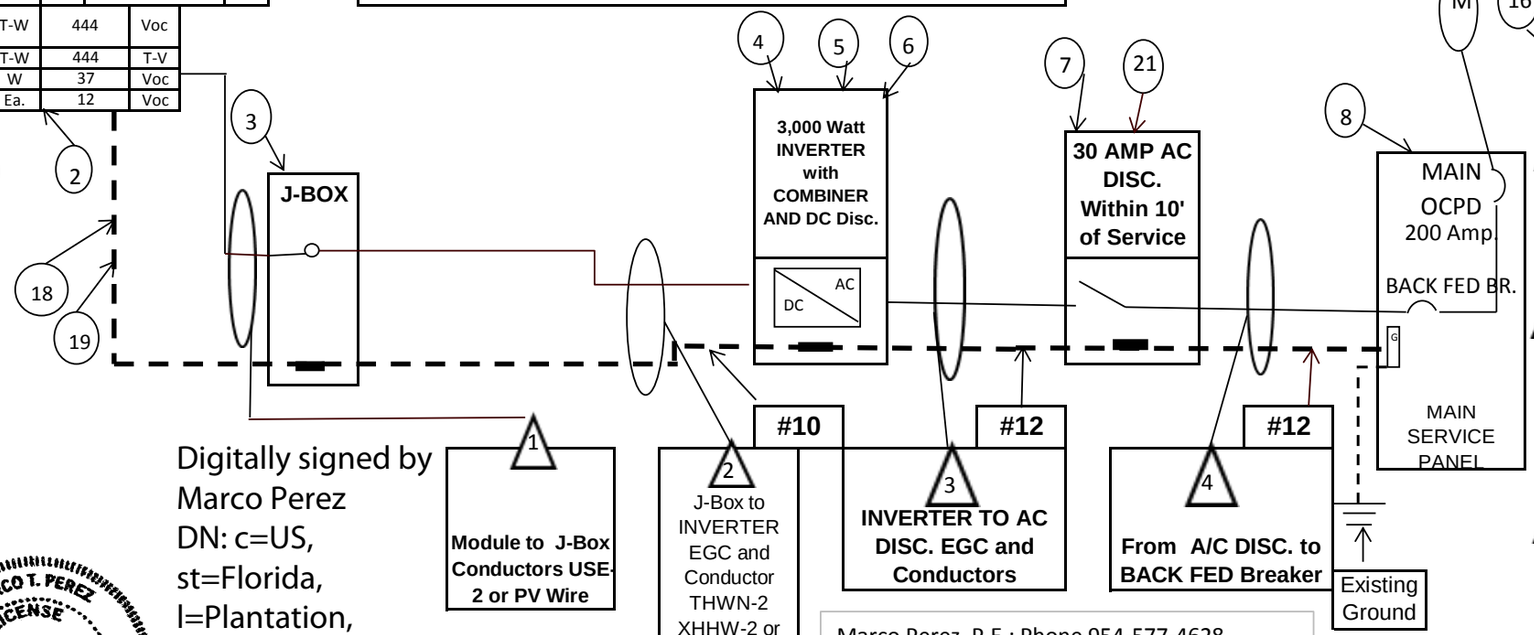

1 FROM MODULE TO J-BOX			
Wire Amp	This is with 1.56*1.4 added		Standard Fuse
8.9	19.4	#12	

2 From J-BOX to Combiner Box to DC DISC,in the Inverter			
Wire Amp	This is with 2.56		Standard Fuse
8.9	22.8	#10	15 amps

3 From Inverter to AC Disc.		
Wire Amp	This is with 1.25	Standard Breaker
12.5	15.6 #12	20 Amps
AC Dlsconnect	30	#12 Wire

4 From A/C DISC. to BACK FED Breaker	
15.6 Amps BACK FED BREAKER MAX	20 AMPS. 1Ø 240v
WIRE FOR BACK FED BREAKER Delta 4	#12

Plan Review	
Building	App. By
Electric	NA
T DEVIER	12/20/ 2012
12/20/ 2012	Date

Note: This plan is invalid unless accompanied by a Go SOLAR permit card and Go SOLAR permit document. Plans must be on job before any inspection will be made.

Digitally signed by Marco Perez
DN: c=US, st=Florida, l=Plantation, email=mperez@broward.org, o=Broward County, cn=Marco Perez
Date: 2012.12.20 08:55:29 -05'00'

MARCO T. PEREZ LICENSE No 45579 STATE OF FLORIDA PROFESSIONAL ENGINEER

Marco Perez, P.E.; Phone 954-577-4628
Florida P.E. License # 45579
Broward County
1 N. University Dr., Box B300
Plantation, FL 33324