STANDARD ELECTRICAL DIAGRAM

	Standard Diagram for Homes 200 amp Panel with Back Fed Brk.
TAG	DESCRIPTION
1	SOLAR PV MODULE
2	PV ARRAY
3	J-BOX Per NEC
4	COMBINER Per Mfg. in INVERTER
5	DC DISCONNECT in INVERTER
6	DC/AC INVERTER Per Mfg..
7	AC DISC. If used shall Comply with NEC 690.15,16,17
8	SERVICE PANEL Exist. 200a 240v
9	SIZE BACK FED BREAKER. Per Mfg..
10	ALL BACK FED BRK. SHALL BE LINE-LINE LISTED
11	DEFAULT TO 15 Amps Per Mfg.
12	Max DC VD Shall be<= 2% Maximum Distance 100' or less
13	Modules shall be listed to UL Standards 1703
14	Inverters shall be listed to UL Standards 1741
15	BACK FED BRK. SHALL NOT BE MORE THAN 20% OF BUS
16	DEFAULT TO 8.9 AMPS. PER. Mfg.
17	90c wire shall be used. And sized at 75c
18	EGC Smaller Than # 6 AWG shall be protected NEC 250.120 C
19	USE-2 or PV WIRE
20	690.45 (A) Size of EGC
21	Within sight of INVERTER or lockable
22	690.64 (B) (7) Inverter Output Conn.

N0. of Strings	1	No. of Modules	8
2000	T-W	296	Voc
2,000	T-W	296	T-V
250	W	37	Voc
8	Ea.	8	Voc

1 STRING AND 8 MODULES	FROM MODULE TO J-BOX		
2,000 Total Wattage	Voltage	240	Wire 90c
1Ø 240v	Wattage Mod Array 1	2,000	#12
	Total Wattage	2,000	

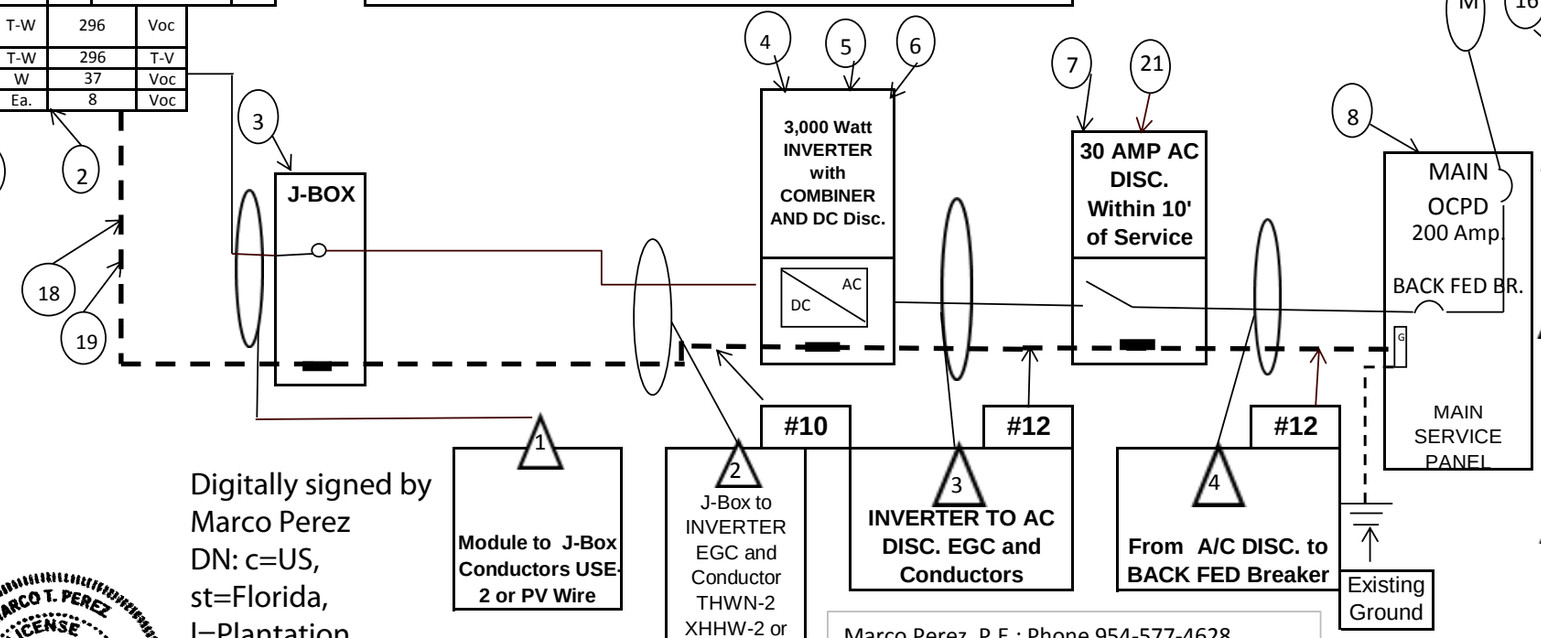

1 FROM MODULE TO J-BOX			
Wire Amp	This is with 1.56*1.4 added		Standard Fuse
8.9	19.4	#12	

2 From J-BOX to Combiner Box to DC DISC,in the Inverter			
Wire Amp	This is with 2.56		Standard Fuse
8.9	22.8	#10	15 amps

3 From Inverter to AC Disc.		
Wire Amp	This is with 1.25	Standard Breaker
8.3	10.4 #12	15 Amps
AC Dlsconnect	30	#12 Wire

4 From A/C DISC. to BACK FED Breaker	
10.4 Amps	15 AMPS.
BACK FED BREAKER MAX	1Ø 240v
WIRE FOR BACK FED BREAKER Delta 4	#12

Note: This plan is invalid unless accompanied by a Go SOLAR permit card and Go SOLAR permit document. Plans must be on job before any inspection will be made.

Plan Review	App. By	Date
Building	NA	12/20/ 2012
Electric	T DEVIER	12/20/ 2012

Digitally signed by Marco Perez
DN: c=US, st=Florida, l=Plantation, email=mperez@broward.org, o=Broward County, cn=Marco Perez
Date: 2012.12.20 08:52:13 -05'00'

MARCO T. PEREZ LICENSE No 45579 STATE OF FLORIDA PROFESSIONAL ENGINEER

Marco Perez, P.E.; Phone 954-577-4628
Florida P.E. License # 45579
Broward County
1 N. University Dr., Box B300
Plantation, FL 33324